DVD Receiver

MX5500D/21S/37 & MX5600D/37

MX5700D/21R/21S/22S/25S

Service
Service
Service

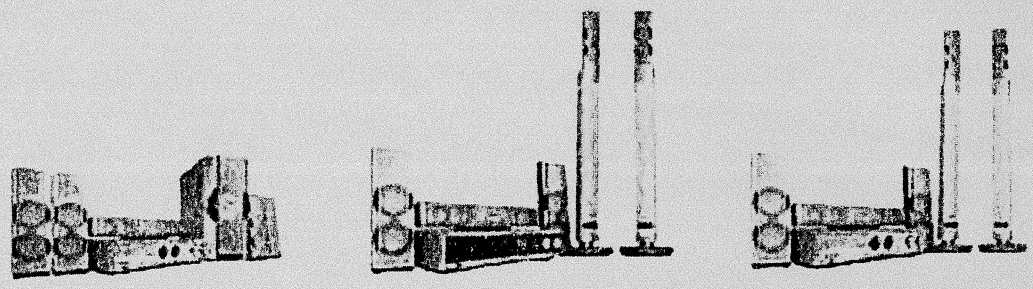

Service Manual

MP3-CD PLAYBACK MP3 COMPACT disc DIGITAL AUDIO

DVD VIDEO COMPACT disc DIGITAL VIDEO

TABLE OF CONTENTS

	Page
Location of pc boards & Version variations	1-2
Technical Specifications	1-3
Measurement setup	1-4
Service Aids, Safety Instruction, etc.	1-5
Disassembly Instructions & Service positions	2-1
Service Test Programs	3-1
Region codes setting, software upgrades, etc	3-3
Set Block diagram & Wiring diagram	4
PCMCIA board	5
Front Board	6
ECO6 Tuner Board: System Non-Cenelec	7A
System Cenelec	7B
Power Module PWR207	8
AV Board	9
5DTC Module	10
CD222 FE (Front End) Board	11
CD222 BE (Back End) Board	12
Set Mechanical Exploded view & parts list	13
History	14

CLASS 1
LASER PRODUCT

© Copyright 2003 Philips Consumer Electronics B.V. Eindhoven, The Netherlands
All rights reserved. No part of this publication may be reproduced, stored in a retrieval system or transmitted, in any form or by any means, electronic, mechanical, photocopying, or otherwise without the prior permission of Philips.

Published by KC 0329 Service Audio Printed in The Netherlands Subject to modification

GB 3139 785 30211

Version 1.1

PHILIPS

LOCATION OF PC BOARDS

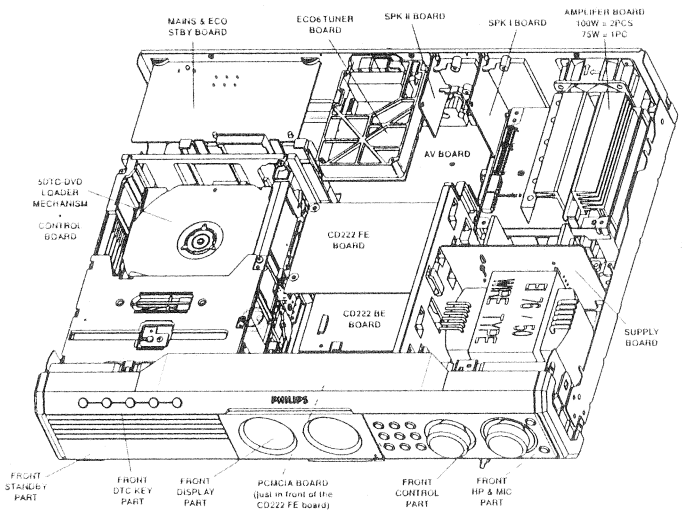

VERSION VARIATIONS:

Type /Versions: / Features & Board in used:	MX5500D				MX5600D		MX5700D			
	/21S	/33S	/35S	/37		/37	/21R	/21S	/22S	/25S
Karaoke	-	x		-		-	x	x	-	-
RDS + News	-	-		-		-	-	-	x	x
Pro-Scan	x	x		x		x	x	x	-	-
PCMCIA (Media Slot)	x	x		x		x	x	x	x	x
Standby - Clock Display	x	x		x		x	x	x	x	x
ECO Standby - No Display	x	x		x		x	x	x	x	x
Voltage Selector	x	-		-		-	x	x	-	-
Digital In / Out	x	x		x		x	x	x	x	x
Aux Input	x	x		x		x	x	x	x	x
TV Input	x	x		x		x	x	x	x	x
Line Output	x	x		x		x	x	x	x	x
SCART output	-	-		-		-	-	-	x	x
Pr, Pb & Y Outputs	x	x		x		x	x	x	-	-
CVBS Output	x	x		x		x	x	x	x	x
S-Video Output	x	x		x		x	x	x	x	x
Headphone Socket	x	x		x		x	x	x	x	x
Mono BE board - CD222 P	-	-		-		-	-	-	-	-
Mono BE board - CD222 PM	-	-		x		x	-	-	x	x
Mono BE board - CD222 PMK	x	x		-		-	x	x	-	-
Tuner board - ECO6 System non-Cenelec	x	x		x		x	x	x	-	-
Tuner board - ECO6 System Cenelec	-	-		-		-	-	-	x	x
75W 6-Ch (Single SW) with 1x Amplifier pcb	x	x		-		-	-	-	-	-
75W 7-Ch (Twin SW) with 1x Amplifier pcb	-	-		-		x	-	-	-	-
100W 6-Ch (Single SW) with 2x Amplifier pcb	-	-		x		-	-	-	-	-
100W 7-Ch (Twin SW) with 2x Amplifier pcb	-	-		-		x	x	x	x	x

SPECIFICATIONS

GENERAL:

Mains voltage : 110-127V/220-240V Switchable for /21..
120V for /37
240V for /25S
220-230V for /22S/33S
Mains frequency : 50/60Hz
Power consumption : < 0,5W at ECO Standby
< 20W Standby (clock on, demo off)
Clock accuracy : < 4 seconds per day
Dimension centre unit : 435 x 100 x 360mm

TUNER:

FM

Tuning range : 87.5-108MHz
Grid : 50kHz for /21../22S/25S/33S
100kHz for /21../37
IF frequency : 10.7MHz ± 25kHz
Aerial input : 75Ω coaxial
Sensitivity at 26dB S/N : < 7µV
Selectivity at 600kHz bandwidth : > 25dB
Image rejection : > 25dB
Distortion at RF=1mV, dev. 75kHz : < 3%
-3dB Limiting point : < 8µV
Crosstalk at RF=1mV, dev. 40kHz : > 18dB

MW

Tuning range : 531-1602kHz for /21../22S/25S/33S
530-1700kHz for /21../37
Grid : 9kHz for /21../22S/25S/33S
10kHz for /21../37
IF frequency : 450kHz ± 1kHz
Aerial input : Frame aerial
Sensitivity at 26dB S/N : < 4.0mV/M
Selectivity at 18kHz bandwidth : > 18dB
IF rejection : > 45dB
Image rejection : > 28dB
Distortion at RF=50mV, m=80% : < 5%

AMPLIFIER:

Output power for **75W versions** (MX5500D/21S/33S)
Stereo mode (DIN) : 2 x 75W RMS [3]
Surround mode [1] : 75W RMS/channel
Output power for **100W versions** (other versions)
Stereo mode (DIN) : 2 x 100W RMS [3] / 2 x 80W FTC [2]
Surround mode [1] : 100W RMS/channel
Frequency response ±3dB : 20Hz-20kHz
Hum (minimum volume) : 200nW
Residue noise (min, volume) : 40nW
Digital Sound Control : Stereo, 3D Sound, Multi modes [4]
Bass & Treble : -3 to +3 [4]
Input sensitivity
TV-in : 350mV ± 3dB
Aux-in : 880mV ± 2dB
Output sensitivity
Line out : 600mV ± 2dB at 47kΩ
Headphone (vol. max.) : 660mV ± 2dB at 32Ω

COMPACT DISC/VCD/DVD:

Video Decoding : MPEG-2 / MPEG-1
Video DAC : 10 Bits
Signal System : PAL / NTSC
Video Format : 4:3 / 16:9
MP3-CD bit rate [5] : 32-256 kbs,variable bitrates
MP3-CD sampling frequencies [5] : 32kHz, 44.1kHz, 48kHz
CBVS out [6]
CVBS level : 1.0 ± 0.1V_{pp}
Luminance S/N ratio : > 45dB (unweighted)
YUV out [6]
Amplitude : 714mV ± 7mV
S/N ratio : > 50dB (unweighted)
S-Video out [6]
Y level : 1.0 ± 0.1V_{pp}
Y S/N ratio : > 48dB (unweighted)
C level (burst) : 286mV_{pp} +1/-4 dB
Digital Out : Coaxial acc IEC61937 / IEC60958
Digital In : Coaxial acc IEC60958

[1] with only channel(s) under meausrement loaded, all other channels are unloaded.
[2] with 8Ω, 120Hz - 12,5kHz & 10% THD for /37
[3] with 8Ω, 1kHz & 10% THD for version other than /37
[4] Frequency response in each setting is software controlled.
[5] Recording format: ISO9660, UDF format is not supported.
[6] Output terminals terminated with 75Ω

MEASUREMENT SETUP

Tuner FM

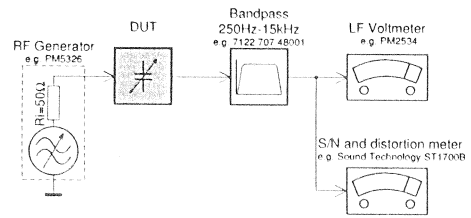

Use a bandpass filter to eliminate hum (50Hz, 100Hz) and disturbance from the pilottone (19kHz, 38kHz).

Tuner AM (MW,LW)

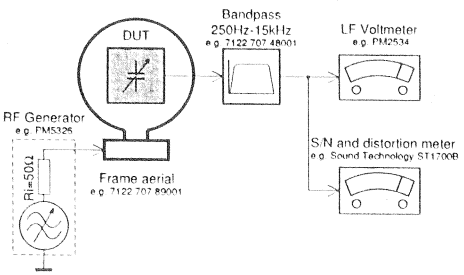

To avoid atmospheric interference all AM-measurements have to be carried out in a Faraday's cage.
Use a bandpass filter (or at least a high pass filter with 250Hz) to eliminate hum (50Hz, 100Hz).

CD

Use Audio Signal Disc SBC429 4822 397 30184
(replaces test disc 3)

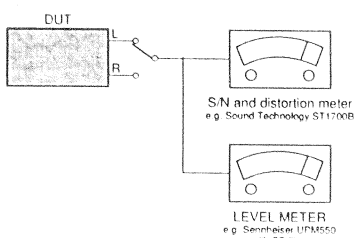

Recorder

Use Universal Test Cassette CrO2 SBC419 4822 397 30069
or Universal Test Cassette Fe SBC420 4822 397 30071

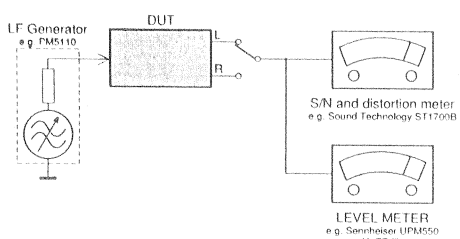

SERVICE AIDS

Service Tools:

Universal Torx driver holder	4822 395 91019
Torx bit T10 150mm	4822 395 50456
Torx driver set T6 - T20	4822 395 50145
Torx driver T10 extended	4822 395 50423
Allen key set (1.5, 2, 2.5, 3, 4, 5, 6, 8mm)	5322 395 10754

Compact Disc:

SBC426/426A Test disc 5 + 5A	4822 397 30096
SBC442 Audio Burn-in Test disc 1kHz	4822 397 30155
SBC429 Audio Signals disc	4822 397 30184
SBC444/444A	4822 397 30245
CD-RW Printed Audio Test Disc	7104 099 96611
Dolby Pro-logic Test Disc	4822 395 10216

ESD Equipment:

Anti-static table mat - large 1200x650x1.25mm	4822 466 10953
Anti-static table mat - small 600x650x1.25mm	4822 466 10958
Anti-static wristband	4822 395 10223
Connector box (1MΩ)	4822 320 11307
Extension cable (to connect wristband to conn. box)	4822 320 11305
Connecting cable (to connect table mat to conn. box)	4822 320 11306
Earth cable (to connect product to mat or box)	4822 320 11308
Complete kit ESD3 (combining all above products)	4822 320 10671
Wristband tester	4822 344 13999

HANDLING CHIP COMPONENTS

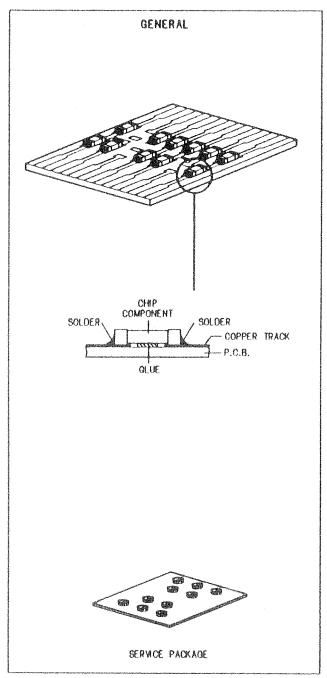

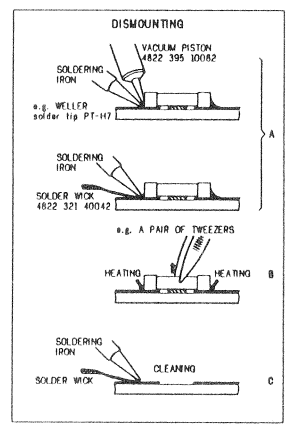

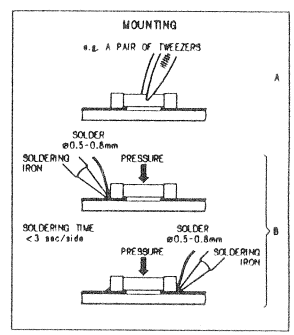

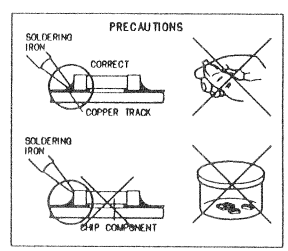

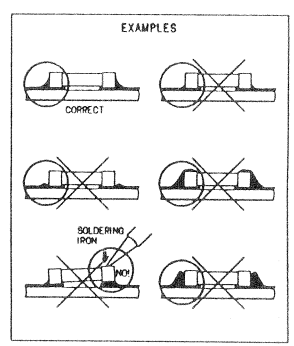

ESD

(GB) WARNING

All ICs and many other semi-conductors are susceptible to electrostatic discharges (ESD). Careless handling during repair can reduce life drastically.
When repairing, make sure that you are connected with the same potential as the mass of the set via a wrist wrap with resistance.
Keep components and tools also at this potential.

(NL) WAARSCHUWING

Alle IC's en vele andere halfgeleiders zijn gevoelig voor electrostatische ontladingen (ESD).
Onzorgvuldig behandelen tijdens reparatie kan de levensduur drastisch doen verminderen.
Zorg ervoor dat u tijdens reparatie via een polsband met weerstand verbonden bent met hetzelfde potentiaal als de massa van het apparaat.
Houd componenten en hulpmiddelen ook op ditzelfde potentiaal.

(F) ATTENTION

Tous les IC et beaucoup d'autres semi-conducteurs sont sensibles aux décharges statiques (ESD).
Leur longévité pourrait être considérablement écourtée par le fait qu'aucune précaution n'est prise à leur manipulation.
Lors de réparations, s'assurer de bien être relié au même potentiel que la masse de l'appareil et enfiler le bracelet serti d'une résistance de sécurité.
Veiller à ce que les composants ainsi que les outils que l'on utilise soient également à ce potentiel.

(D) WARNUNG

Alle ICs und viele andere Halbleiter sind empfindlich gegenüber elektrostatischen Entladungen (ESD).
Unsorgfältige Behandlung im Reparaturfall kan die Lebensdauer drastisch reduzieren.
Veranlassen Sie, dass Sie im Reparaturfall über ein Pulsarmband mit Widerstand verbunden sind mit dem gleichen Potential wie die Masse des Gerätes.
Bauteile und Hilfsmittel auch auf dieses gleiche Potential halten.

(I) AVVERTIMENTO

Tutti IC e parecchi semi-conduttori sono sensibili alle scariche statiche (ESD).
La loro longevità potrebbe essere fortemente ridatta in caso di non osservazione della più grande cauzione alla loro manipolazione.
Durante le riparazioni occorre quindi essere collegato allo stesso potenziale che quello della massa dell'apparecchio tramite un braccialetto a resistenza.
Assicurarsi che i componenti e anche gli utensili con quali si lavora siano anche a questo potenziale.

(GB)
Safety regulations require that the set be restored to its original condition and that parts which are identical with those specified, be used.

(NL)
Veiligheidsbepalingen vereisen, dat het apparaat bij reparatie in zijn oorspronkelijke toestand wordt teruggebracht en dat onderdelen, identiek aan de gespecificeerde, worden toegepast.

(F)
Les normes de sécurité exigent que l'appareil soit remis à l'état d'origine et que soient utilisées les pièces de rechange identiques à celles spécifiées.

(D)
Bei jeder Reparatur sind die geltenden Sicherheitsvorschriften zu beachten. Der Original zustand des Geräts darf nicht verändert werden; für Reparaturen sind Original-Ersatzteile zu verwenden.

(I)
Le norme di sicurezza esigono che l'apparecchio venga rimesso nelle condizioni originali e che siano utilizzati i pezzi di ricambio identici a quelli specificati.

"After servicing and before returning set to customer perform a leakage current measurement test from all exposed metal parts to earth ground to assure no shock hazard exist. The leakage current must not exceed 0.5mA."

"Pour votre sécurité, ces documents doivent être utilisés par des spécialistes agréés, seuls habilités à réparer votre appareil en panne".

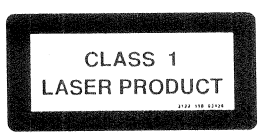

(GB) Warning !

Invisible laser radiation when open.
Avoid direct exposure to beam.

(S) Varning !

Osynlig laserstrålning när apparaten är öppnad och spärren är urkopplad. Betrakta ej strålen.

(SF) Varoitus !

Avatussa laitteessa ja suojalukituksen ohitettaessa olet alttiina näkymättömälle laserisäteilylle. Älä katso säteeseen!

(DK) Advarse !

Usynlig laserstråling ved åbning når sikkerhedsafbrydere er ude af funktion. Undgå udsaettelse for stråling.

DISMANTLING INSTRUCTIONS

Dismantling of the Front Panel assembly

1) Loosen the 9 screws to dismantle the Top Cover (pos 252)
   - 2 screws on each side
   - 5 screws on the Rear Panel (pos 251).

2) Loosen 5 screws A and 8 catches C1 to slide the Front Panel assembly (pos 101, 102, 103, etc) as per figure 1.

Note: To remove the Source / Volume control pc board (pos 1105B) 2 nuts hidden below the control knob assembly (pos 133, 134 and 135) must first be removed.

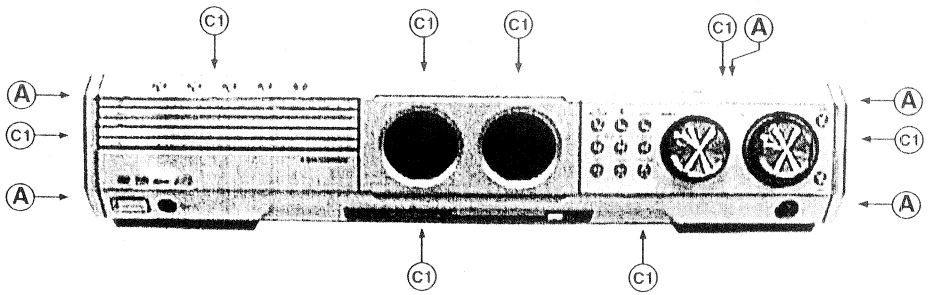

Figure 1

Hints for re-assembly of Top Cover

Due to appearance design the Top cover (pos 252) is sandwiched between the Front panel (pos 101) and the 2 side covers (pos 102 & 103), this make it necessary to remove the 2 side covers before re-assembly of Top cover.

1) To remove the side cover use a small screw driver with marking 16mm from the tip end.

2) Insert the screw driver into slot (as shown in figure 2) and push the tip outwards to release the side cover catch. The side cover can be pull outwards as soon as the top catch is released.

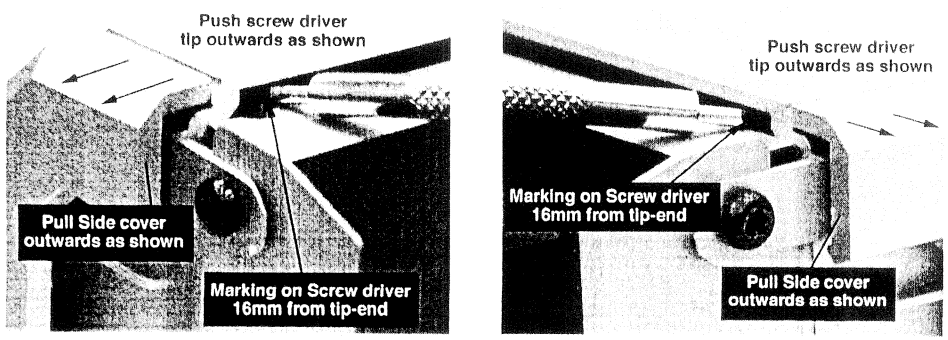

Figure 2

Dismantling the Tuner, Mains and AV boards

1) Loosen 3 screws D and 2 catches C2 on the Rear panel (pos 251) to remove the Tuner board assemby (pos 1101) as pe figure 3.

2) Loosen 1 screws E and 2 catches C3 to unslot the Mains board (pos 1102-A) out of the Rear panel as per figure 4.

3) Loosen bracket (pos 254) by turning a catch, sliding towards the outside and lifting it upwards as per figure 5.

4) Loosen 7 screws F (8 screws for Scart version) and 2 C5 to separate Rear Plate assembly (pos 251 + 227) from the Bottom plate as per figure 3.

5) Uncatch C4 to remove the AV board (pos 1104) from the Bottom & Rear Plate assembly (pos 251 + 227) as per figure 5.

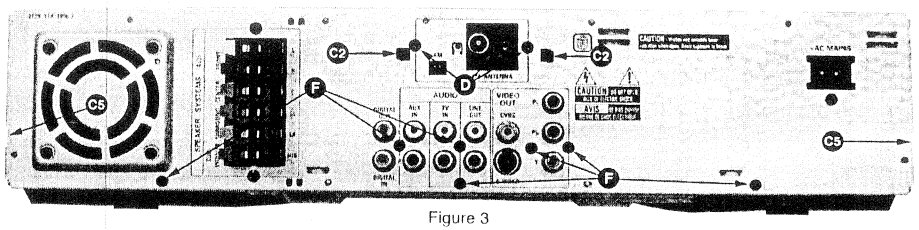

Figure 3

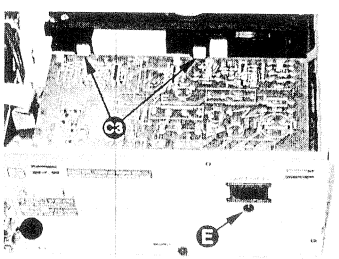

Figure 4

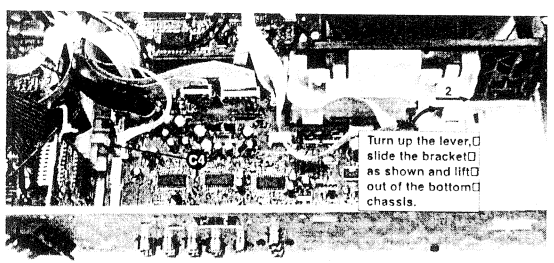

Figure 5

Dismantling the 5DTC Module

1) Loosen 1 screws E and 2 catches C3 to remove the Mains board as per figure 4.

2) Loosen bracket (pos 254) by turning a catch, sliding towards the outside and lifting it upwards as per figure 5.

3) Loosen 3 screws G, lift up the 5DTC Module's (pos 1103-A) rear and pull the module out towards the rear as per figure 6.

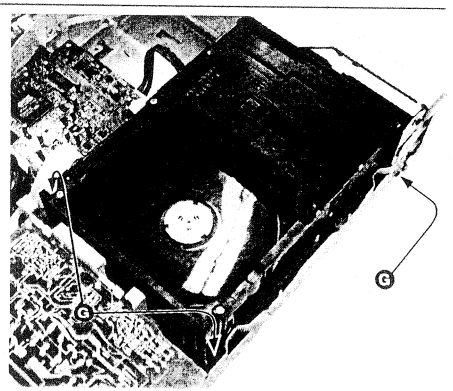

Figure 6

Dismantling the Mono FE and BE boards

1) Loosen 2 screws and 2 catches to remove the Mono BE board (pos 1103-B).

2) Loosen 2 screws and 2 catches to remove the Mono FE board (pos 1103-C).

3) Loosen 2 screws to remove the PCMCIA board (pos 1106).

Dismantling the Supply & Power Amplifier boards

1) Loosen 2 screws B mounting the Supply board's (pos 1102-B) heatsink to the Bottom Plate (pos 227) as per figure 7.

   Note: During re-assembly care must be taken to ensure the Mains Transformer wires to the Supply board is routed properly below the board.

2) Loosen 4 screws C (8 screws for 100W version with 2 pcs of Amplifier boards) to dismantle the Power Amplifier board (pos 1102-D) from the Bottom Plate as per figure 7.

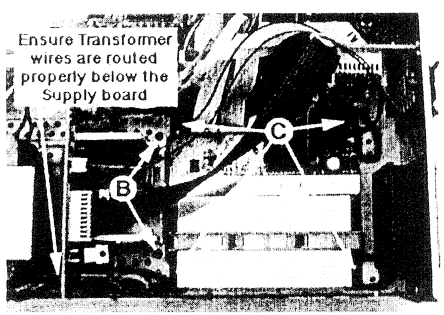

Figure 7

Service positions

Service position A (Top cover removed)

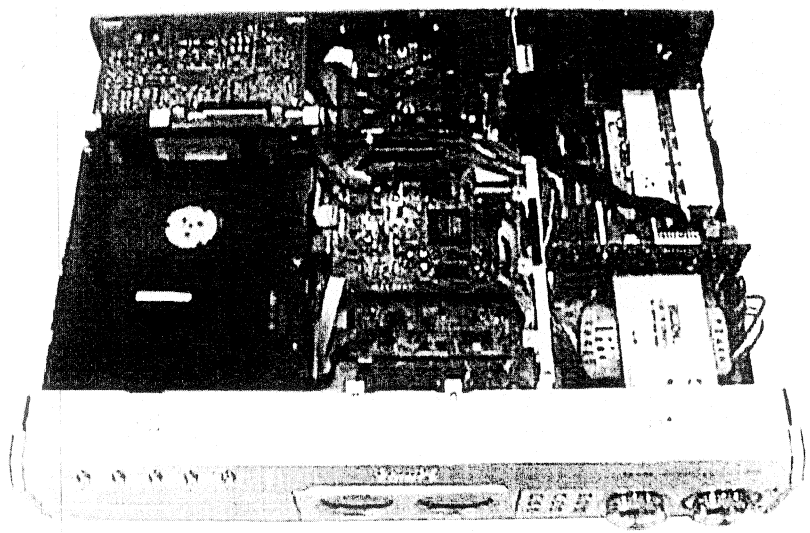

Service position B (Front Panel loosen)

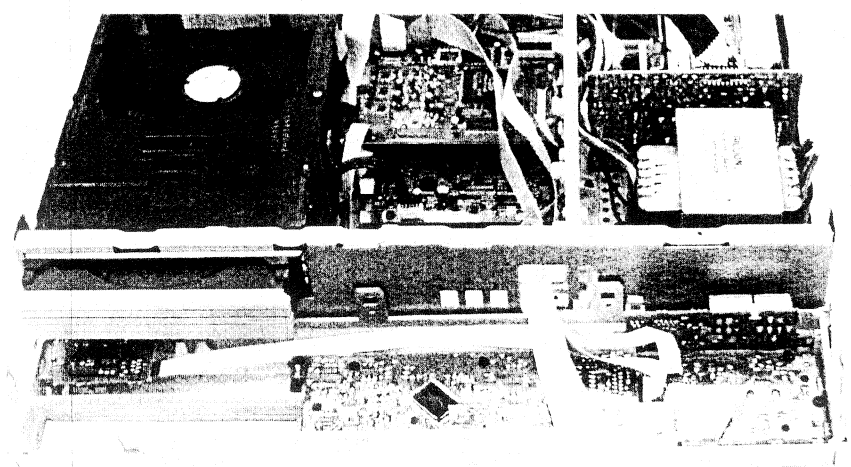

Service positions

Service position C (Supply and Amplifier boards loosen)

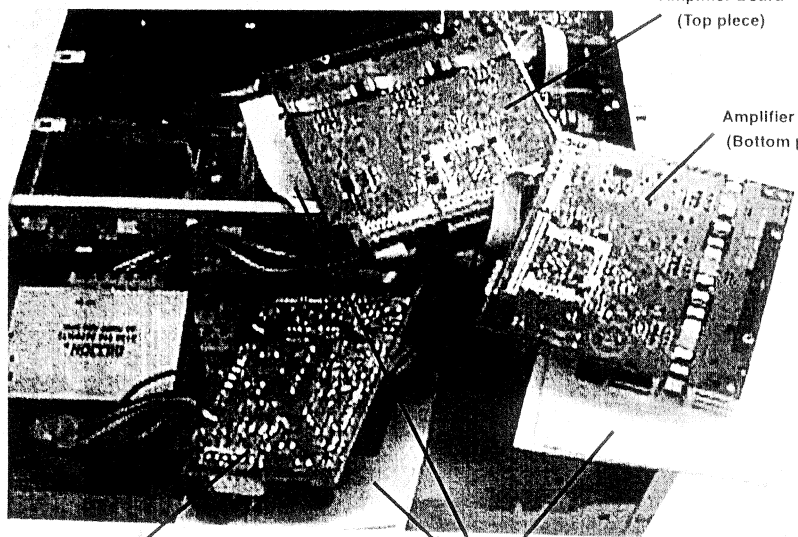

Caution:

1) In some of the service positions the Mains supply is exposed, therefore service technicians have to exercise care to prevent electric shock.

2) The copper pattern on the Mains board should be covered with non-conductive insulation during fault-finding on other parts of the set.

3) Insulation sheet (eg. thick paper or cardboard) should be use during fault-finding to prevent short-circuiting of copper patterns to metallic surroundings.

Note:

The ground connection between AV board stoko pin 1100 and Amplifier board stoko pin 1320 must be connect ed during Service pos C and D in order to have sound output at the Loudspeakers.

2-3

Service position D (Mains & AV boards loosen)

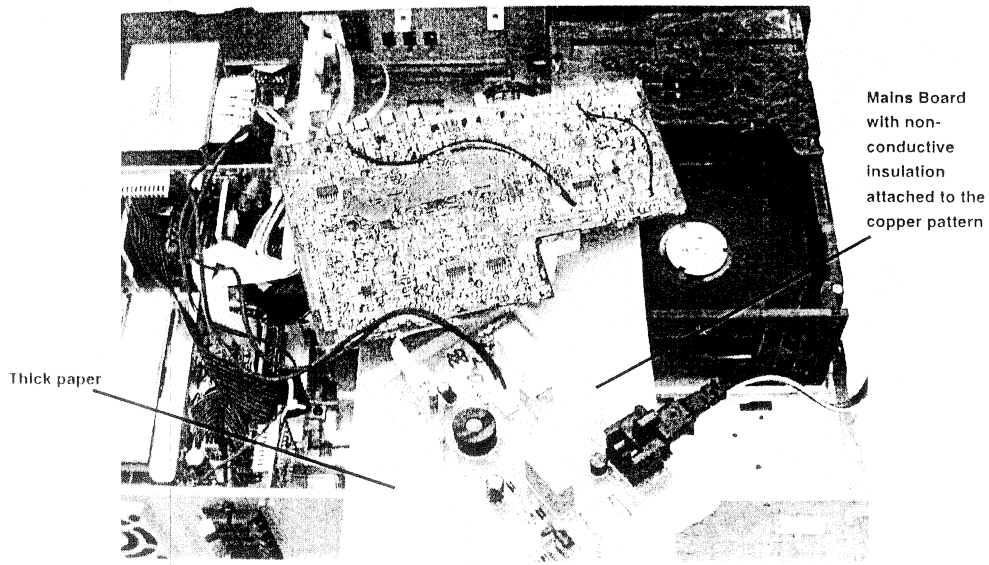

Service position E (5DTC Mechanism, Mono FE and Mono BE boards loosen)

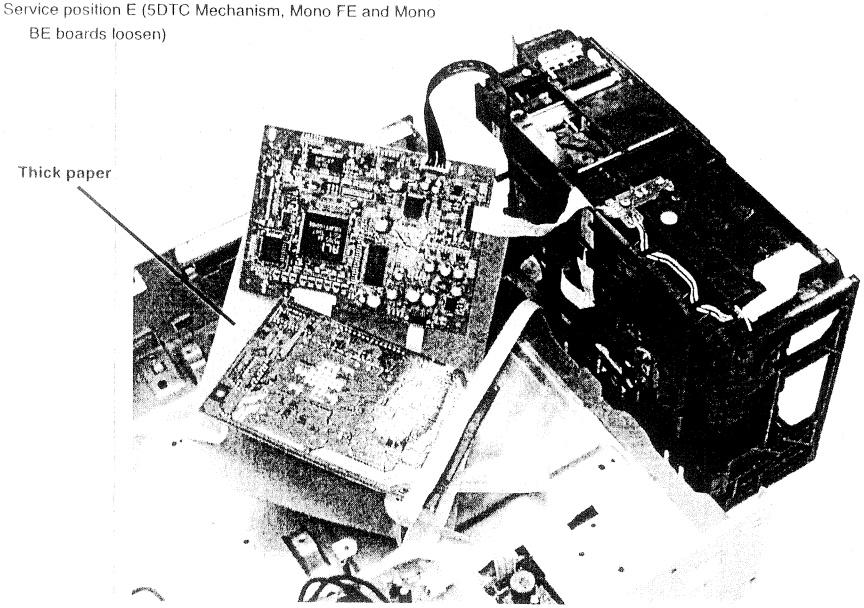

3-1

SERVICE TEST PROGRAM I

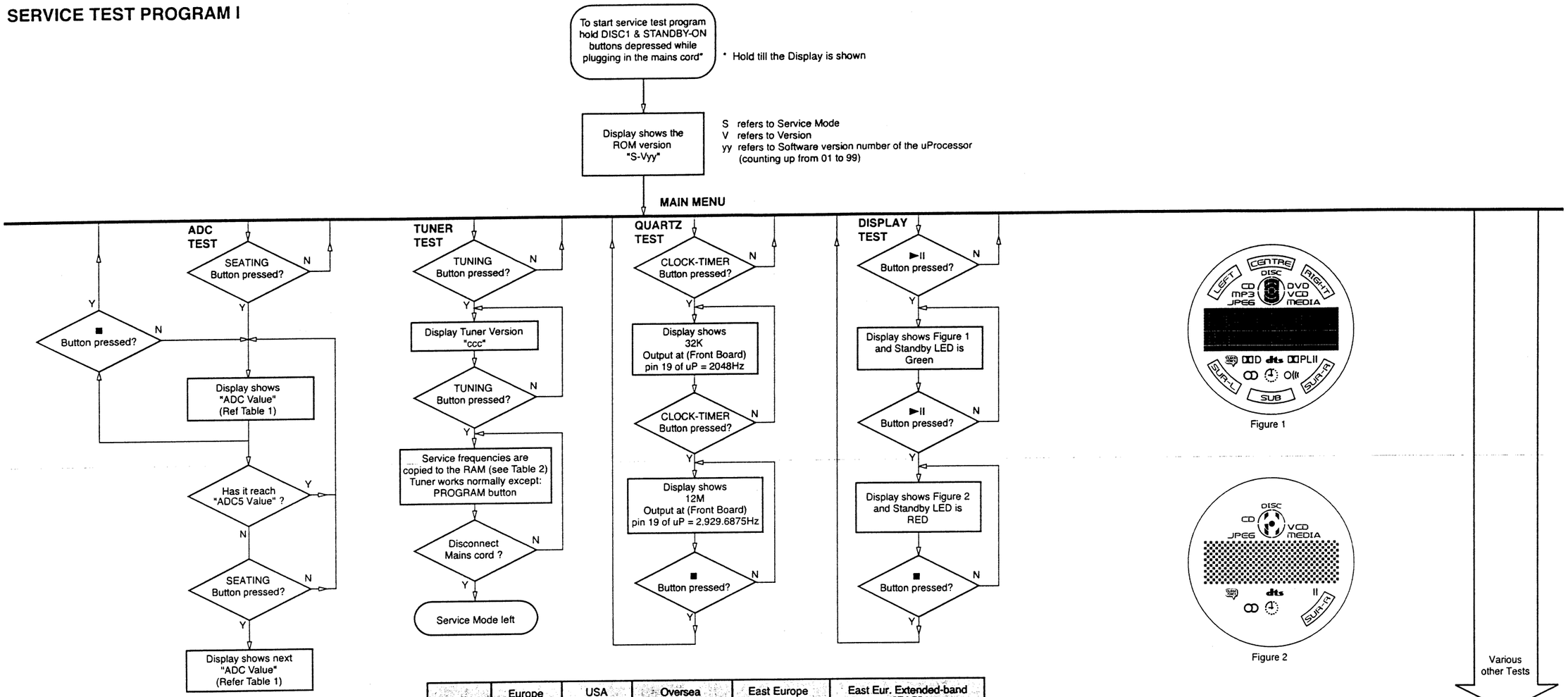

Figure 1

Figure 2

Name	Input line to uProcessor IC	Remarks
ADC1	Key0	Return the value assign for each key button.
ADC2	Key1	Return the value assign for each key button.
ADC3	VU_IN	Varies according to the signal dc level
ADC4	MUX_DET	The set temperature is measured via this NTC line, if lower than 69 the set goes into Standby.
ADC5	Options	Return the value assign for the different possible options

Table 1

Note:
ADC Test is used for checking the ADC inputs to the microprocessor. The display shows an ADC value between 0 and 255 for an input signal between 0 and 5V.

PRESET	Europe "EUR"	USA "USA"	Oversea "OSE"	East Europe "EAS"	East Eur. Extended-band "EAS"
1	87.5MHz	87.5MHz	87.5MHz	87.5MHz	65.81MHz
2	108MHz	108MHz	108MHz	108MHz	108MHz
3	531kHz	530kHz	530/531kHz*	531kHz	74MHz
4	1602kHz	1700kHz	1700/1602kHz*	1602kHz	87.5MHz
5	558kHz	560kHz	560/558kHz*	558kHz	531kHz
6	1494kHz	1500kHz	1500/1494kHz*	1494kHz	1602kHz
7	87.5MHz	98MHz	98/87.5MHz*	87.5MHz	558kHz
8	87.5MHz	87.5MHz	87.5MHz	87.5MHz	1494kHz
9	87.5MHz	87.5MHz	87.5MHz	87.5MHz	98MHz
10	87.5MHz	87.5MHz	87.5MHz	87.5MHz	70.01MHz
11	98MHz	87.5MHz	87.5/98MHz*	98MHz	65.81MHz

Table 2

Note: * Depending on the selected grid frequency (9 or 10kHz).
By holding the "DISC5" and "STANDBY-ON" buttons depressed while switching on the Mains supply, one of the undermentioned features will be activated:
- the tuning grid frequency is toggled between 9kHz and 10kHz for the Oversea (/21) version.

TEST	Activated with	ACTION
EEPROM TEST	►►I ■ to Exit	Some test patterns will be sent to the EEPROM. "PASS" is displayed if the uProcessor read back the test patterns correctly, otherwise "FAIL" will be displayed.
EEPROM FORMAT TEST	I◄◄	Load default data. Display shows "NEW" for 1 second. **Caution! All presets from the customer will be lost!!**
AUTO STANDBY TOGGLE	SUBW + (Remote Control)	Pressing this button will toggle between the status "AUTO STANDBY ON" and "AUTO STANDBY OFF". The status will scroll once across the Display.
ROTARY ENCODER TEST	SOURCE / VOLUME Knob	Display shows value for 2 seconds. Values increases or decreases in steps of 1 until 0 (Min.) or 40 (Max.) is reached.
LEAVE SERVICE TEST PROGRAM	Disconnect mains cord	

3-2

SERVICE TEST PROGRAM II

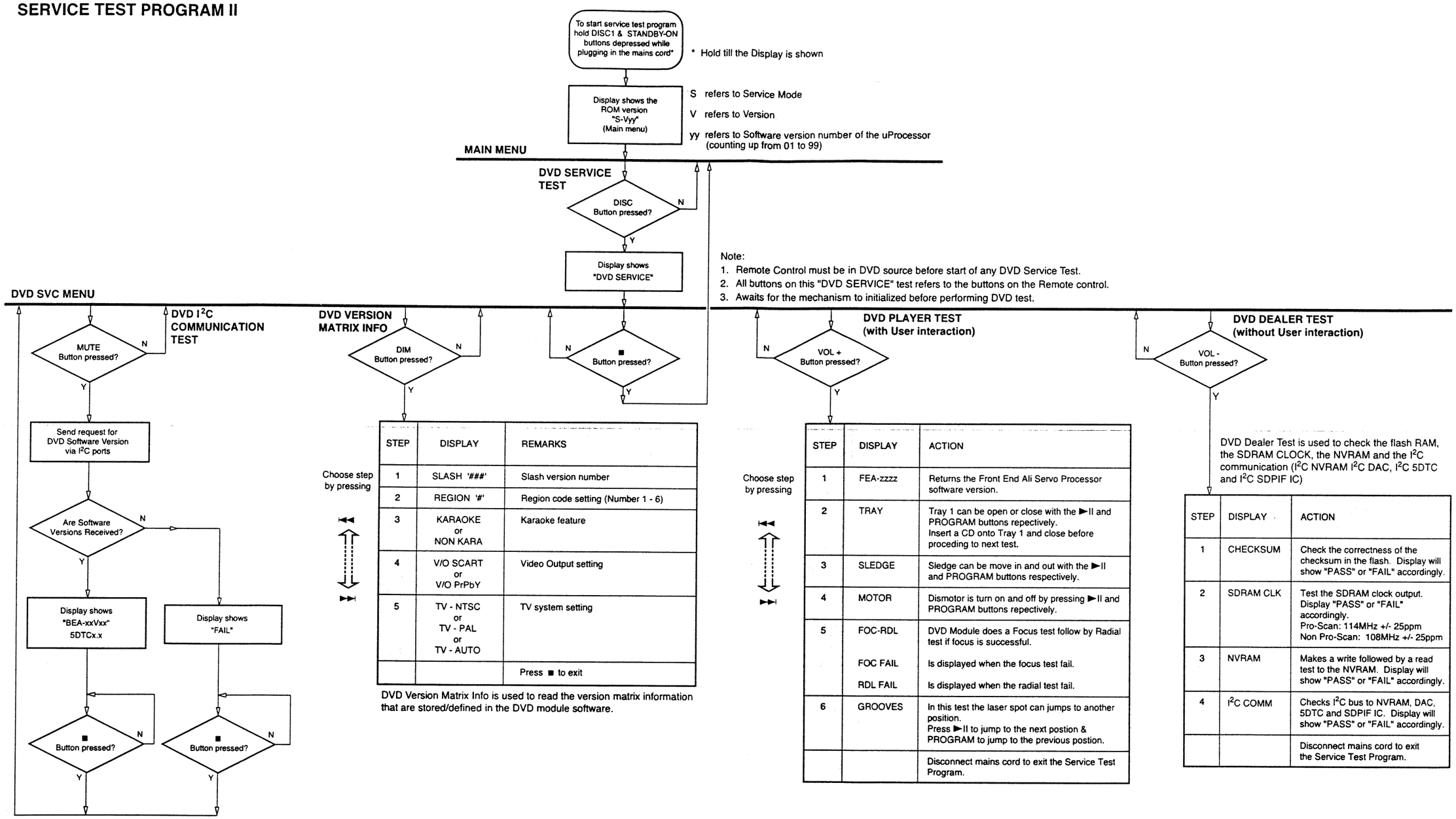

DVD I²C Communication Test is used to test the I²C communication port between the DVD module and the microprocessor of the set.

where: BEA-xxVxx is the Back End Application software version
5DTCx.x is the 5DTC software version

Choose step by pressing ⏮ ⏭

STEP	DISPLAY	REMARKS
1	SLASH '###'	Slash version number
2	REGION '#'	Region code setting (Number 1 - 6)
3	KARAOKE or NON KARA	Karaoke feature
4	V/O SCART or V/O PrPbY	Video Output setting
5	TV - NTSC or TV - PAL or TV - AUTO	TV system setting
		Press ■ to exit

DVD Version Matrix Info is used to read the version matrix information that are stored/defined in the DVD module software.

Choose step by pressing ⏮ ⏭

STEP	DISPLAY	ACTION
1	FEA-zzzz	Returns the Front End Ali Servo Processor software version.
2	TRAY	Tray 1 can be open or close with the ►II and PROGRAM buttons repectively. Insert a CD onto Tray 1 and close before proceding to next test.
3	SLEDGE	Sledge can be move in and out with the ►II and PROGRAM buttons respectively.
4	MOTOR	Dismotor is turn on and off by pressing ►II and PROGRAM buttons repectively.
5	FOC-RDL	DVD Module does a Focus test follow by Radial test if focus is successful.
	FOC FAIL	Is displayed when the focus test fail.
	RDL FAIL	Is displayed when the radial test fail.
6	GROOVES	In this test the laser spot can jumps to another position. Press ►II to jump to the next postion & PROGRAM to jump to the previous postion.
		Disconnect mains cord to exit the Service Test Program.

DVD Dealer Test is used to check the flash RAM, the SDRAM CLOCK, the NVRAM and the I²C communication (I²C NVRAM I²C DAC, I²C 5DTC and I²C SDPIF IC)

STEP	DISPLAY	ACTION
1	CHECKSUM	Check the correctness of the checksum in the flash. Display will show "PASS" or "FAIL" accordingly.
2	SDRAM CLK	Test the SDRAM clock output. Display "PASS" or "FAIL" accordingly. Pro-Scan: 114MHz +/- 25ppm Non Pro-Scan: 108MHz +/- 25ppm
3	NVRAM	Makes a write followed by a read test to the NVRAM. Display will show "PASS" or "FAIL" accordingly.
4	I²C COMM	Checks I²C bus to NVRAM, DAC, 5DTC and SDPIF IC. Display will show "PASS" or "FAIL" accordingly.
		Disconnect mains cord to exit the Service Test Program.

Reprogramming of DVD version matrix

Caution:
This information is confidential and may not be distributed. Only a qualified service person should reprogram the mono BE board.

After replacement/repair of the Mono BE board, the customer settings and also the region code may be lost. Reprogramming will put the set back in the state in which it has left the factory, i.e. with the default settings and the allowed region code.

Reprogramming will be done by way of the Remote Control.
Put the player in stop mode, Disc 1 with no disc loaded.

Do the following steps with the Remote Control:

1) Press **<DISC MENU>** followed by numerical keys **<1> <5> <9>**
   The set display shows: "**- 0 - 0 - 0 - 0 -** "

2) Press now successively the following numerical keys :

for MX5500D/21S	:	**<3><2><4> <0><1><1> <0><0>**	**AP**
for MX5500D/33S	:	**<3><5><4> <0><1><2> <0><0>**	**AP - Korea**
for MX5500D/35S	:	**<6><5><4> <0><1><1> <0><0**	**AP - China**
for MX5500D/37	:	**<1><1><4> <0><1><3> <0><0>**	**US**
for MX5600D/37	:	**<1><1><4> <0><1><3> <0><0>**	**US**
for MX5700D/21R	:	**<3><2><4> <0><1><1> <0><0>**	**AP**
for MX5700D/21S	:	**<3><2><4> <0><1><1> <0><0>**	**AP**
for MX5700D/22S	:	**<2><2><4> <0><1><4> <0><0>**	**Europe**
for MX5700D/25S	:	**<2><2><4> <0><1><4> <0><0>**	**UK**

3) Press **<DISC MENU>** again. The set display will show: "**DONE**".
   Caution: The set needs about 3 seconds to reset to required setting.

4) Disconnect mains to ensure proper reset.

Procedure for check Software version

1) Select Disc with the Remote Control
2) Press <SYSTEM MENU>
3) Use the down key move all the way down (4x) to bottom of "Setup Menu".
4) Use the right key move to the sub-menu.
5) Use the down key move down (3x) to "Default" and down one more time to see the software version.
6) The TV screen will shows:
   R1000 BEA3131PV08 R2812 V72
   where 1000 = DVD version matrix (Region, Karaoke Yes/No, Default Video O/P, Default TV system)
   31V08 = BE software version
   2812 = FE software version
   72 = 5DTC servo version
7) Press <OK> three times to exit.

Procedure to upgrade software

1) Power up the set and open tray Disc 1.
2) Place upgrade CD-ROM onto tray and close.
3) The set will display "DOWNLOAD" while the TV screen will shows:
   Reading --> Update BEA --> Writing --> Done --> Update FEA --> FEA Finish --> Unload Disc 1
4) Tray Disc 1 should then open.
5) The whole process should last for less than 2 minutes. Remove the upgrade CD-ROM and unplug the Mains supply.

4-1

SET BLOCK DIAGRAM

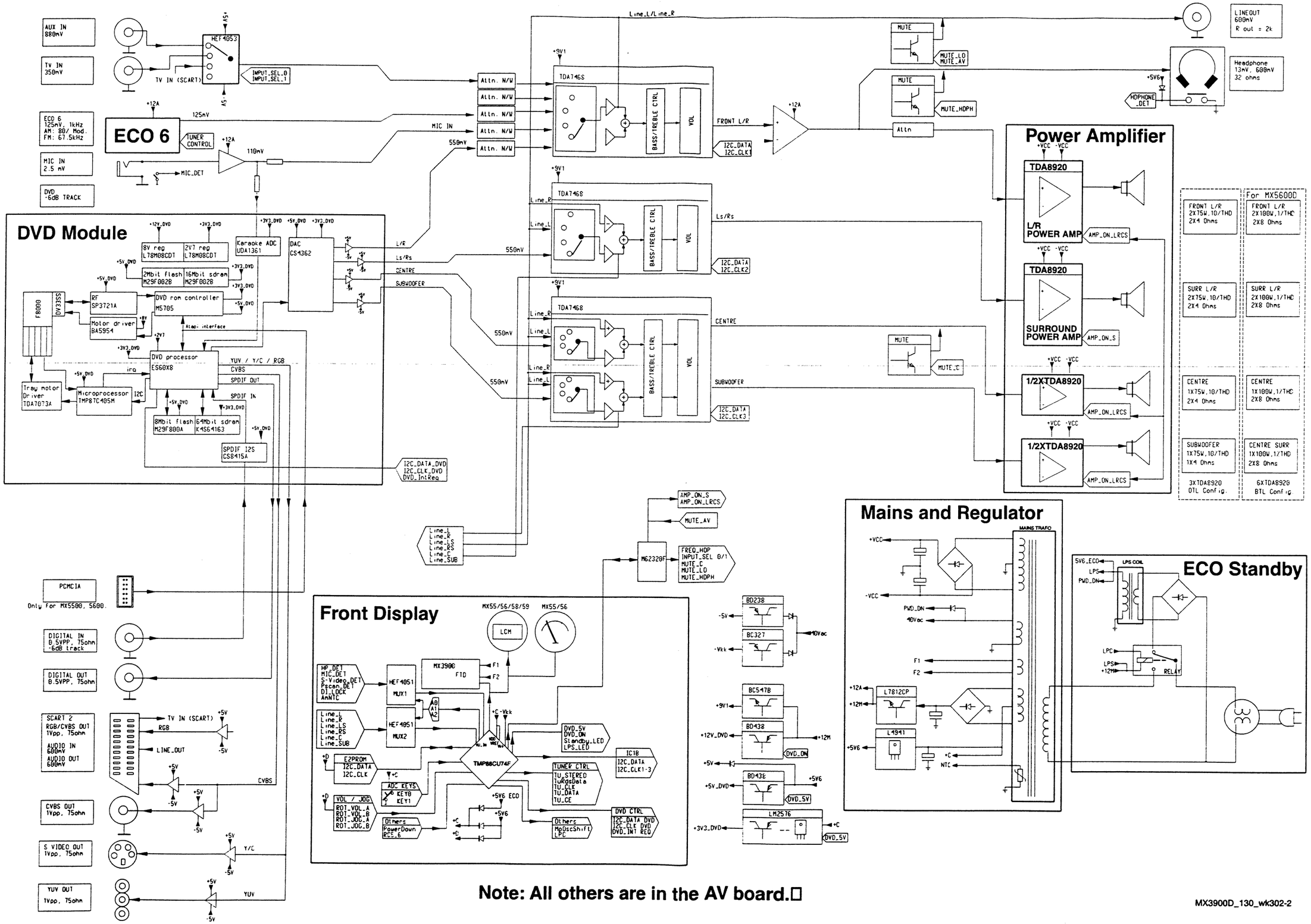

Note: All others are in the AV board.

MX3900D_130_wk302-2

4-2

MAIN WIRING DIAGRAM

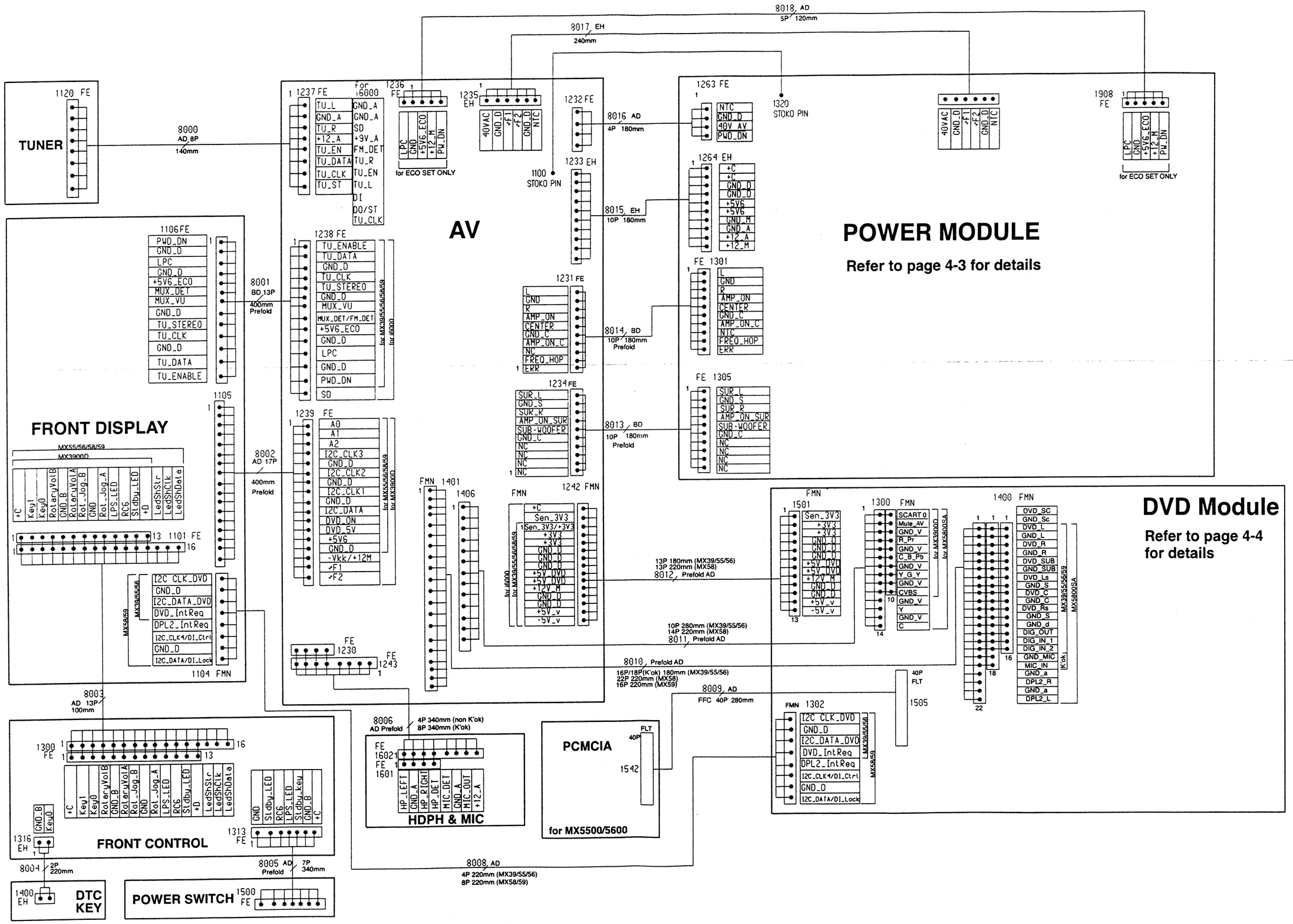

4-3

WIRING DIAGRAM - POWER MODULE DETAILS

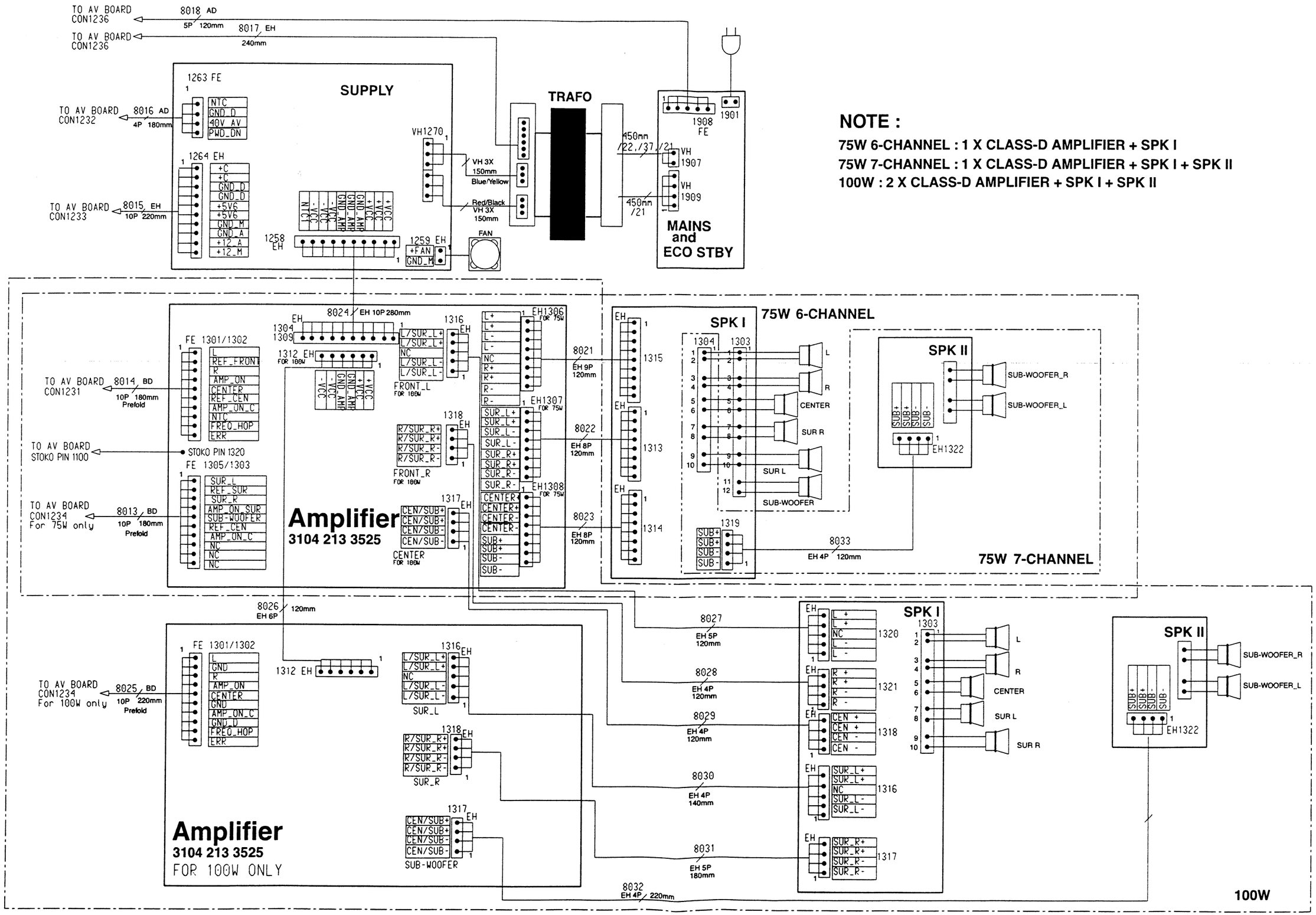

NOTE :

75W 6-CHANNEL : 1 X CLASS-D AMPLIFIER + SPK I

75W 7-CHANNEL : 1 X CLASS-D AMPLIFIER + SPK I + SPK II

100W : 2 X CLASS-D AMPLIFIER + SPK I + SPK II

4-4

WIRING DIAGRAM - DVD MODULE DETAILS

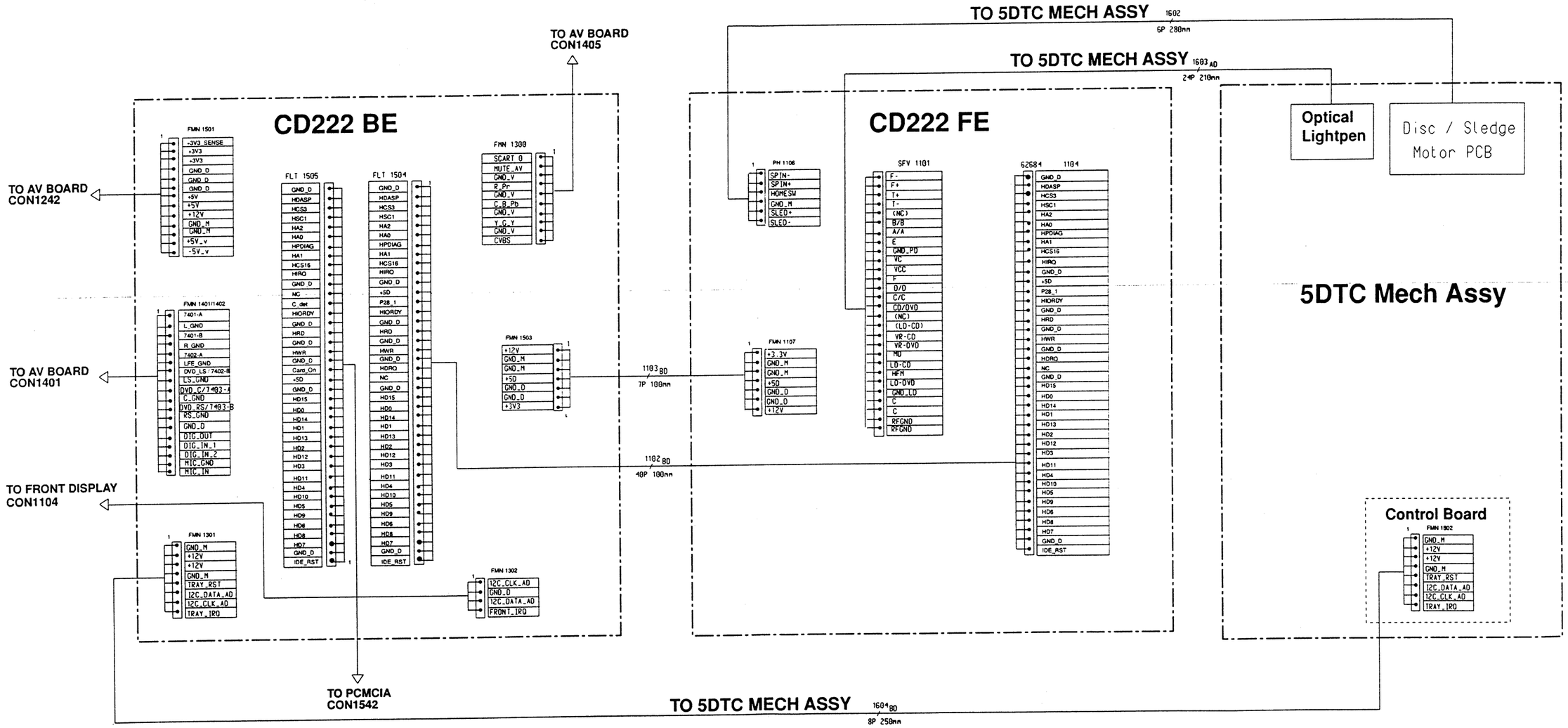

PCMCIA BOARD

TABLE OF CONTENTS

Circuit Diagram 5-2
Component & Chips Layout 5-3
Electrical parts list 5-4

Notes:

5-2

CIRCUIT DIAGRAM

1500 A7	2510 E2	2513 F6	3500 C3	3503 B3	3506 A3	3509 A3	3512 B3	3515 C3	3522 C3	3525 D3	3528 D3	3531 E3	3545 B9	3550 F9	3553 F8	3556 E7	3559 E5	3562 E4	3570 A3	4520 B6	4570 E1	7502 F9	7505 F5
1542 F1	2511 F5	2514 F6	3501 C3	3504 B3	3507 A3	3510 B3	3513 C3	3516 A2	3523 D3	3526 D3	3529 D3	3532 E3	3546 C9	3551 F9	3554 F7	3557 F6	3560 F5	3563 F4	4500 C8	4550 D1	4580 E1	7503 F8	7510 B6
2502 B8	2512 F5	2515 F4	3502 B3	3505 B3	3508 A3	3511 B3	3514 C3	3521 C3	3524 D3	3527 D3	3530 E3	3540 C6	3548 E2	3552 E7	3555 F7	3558 F6	3561 E3	3564 F4	4510 E8	4560 D1	7501 E8	7504 E6	

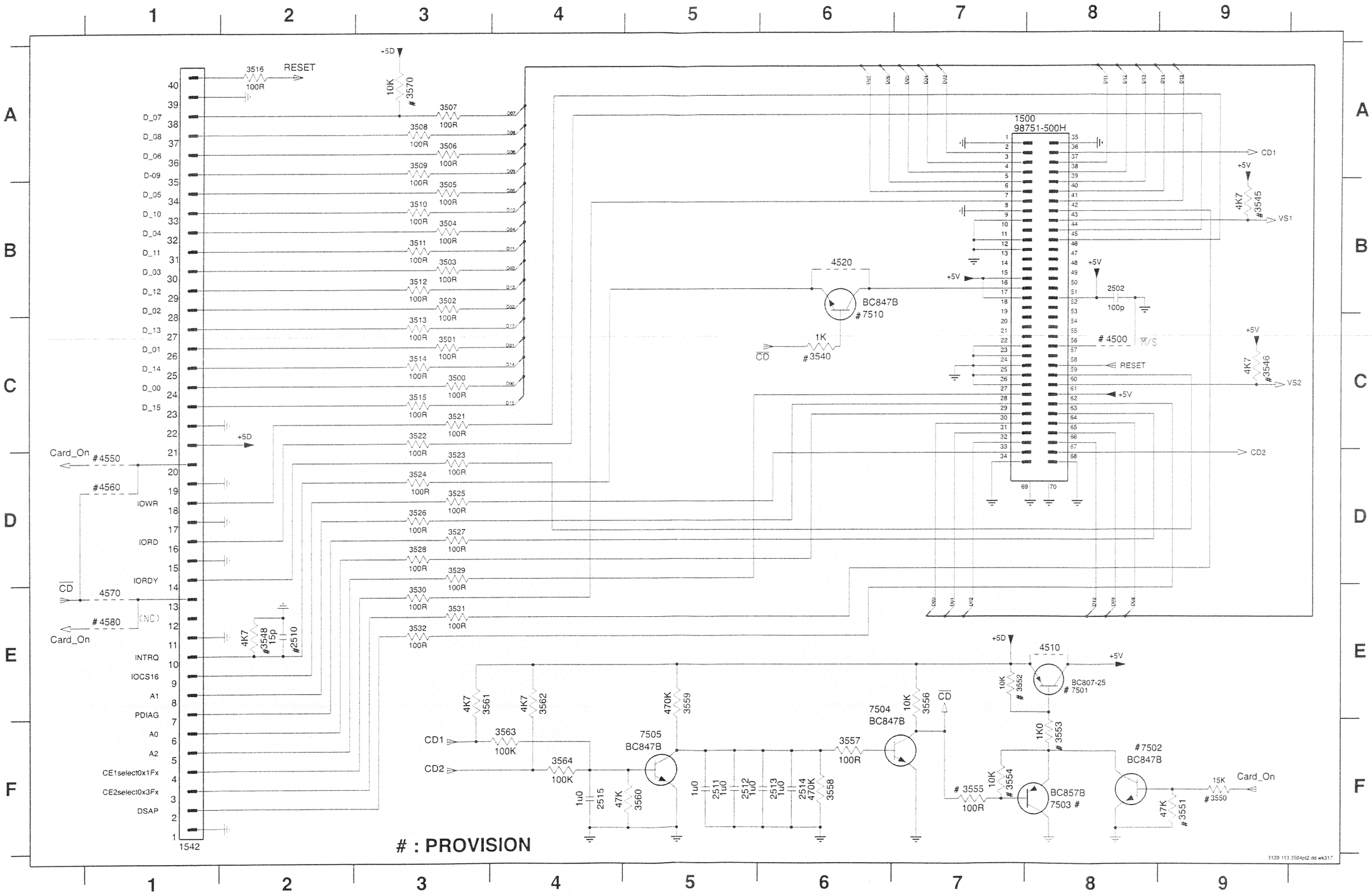

: PROVISION

COMPONENT & CHIPS LAYOUT

1500 A2 1542 A1

This assemby drawing shows a summary of all possible versions. For components used in a specific version see schematic and respective parts list.

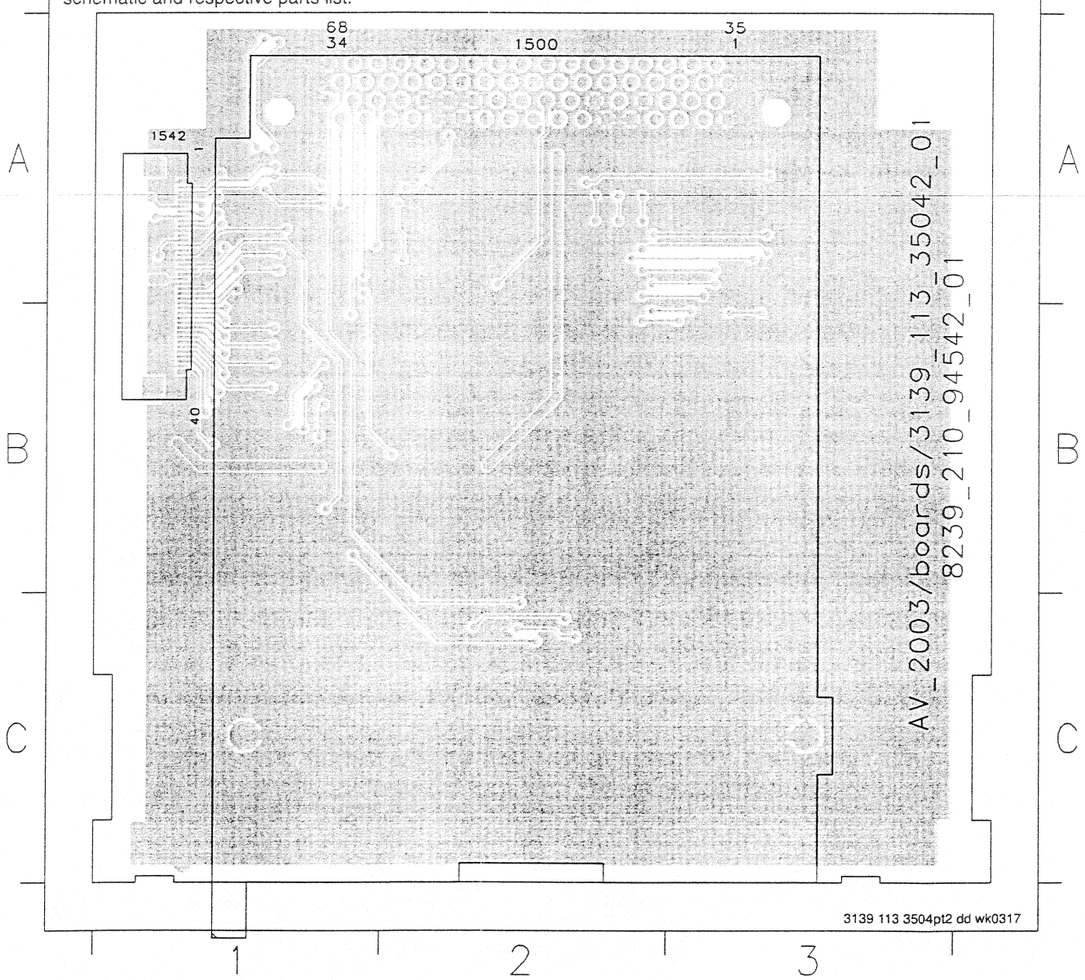

5-3

2502	A2	3502	B3	3511	B3	3524	A2	3540	A2	3555	B2	3564	B2	7501	B2
2510	A3	3503	B3	3512	B3	3525	A3	3545	A2	3556	B2	3570	B3	7502	B2
2511	B2	3504	B3	3513	A3	3526	A3	3546	A2	3557	B2	4500	A2	7503	B2
2512	B2	3505	B3	3514	A3	3527	A3	3548	A3	3558	B2	4510	B2	7504	B2
2513	B2	3506	B3	3515	A3	3528	A3	3550	C2	3559	B2	4520	A2	7505	B2
2514	B2	3507	B3	3516	B3	3529	A3	3551	C2	3560	B2	4550	B3	7510	A2
2515	B2	3508	B3	3521	A3	3530	A3	3552	B2	3561	C2	4560	B3		
3500	A3	3509	B3	3522	A3	3531	A3	3553	B2	3562	C2	4570	B3		
3501	A3	3510	B3	3523	A3	3532	A3	3554	B2	3563	C2	4580	B3		

This assemby drawing shows a summary of all possible versions. For components used in a specific version see schematic and respective parts list.

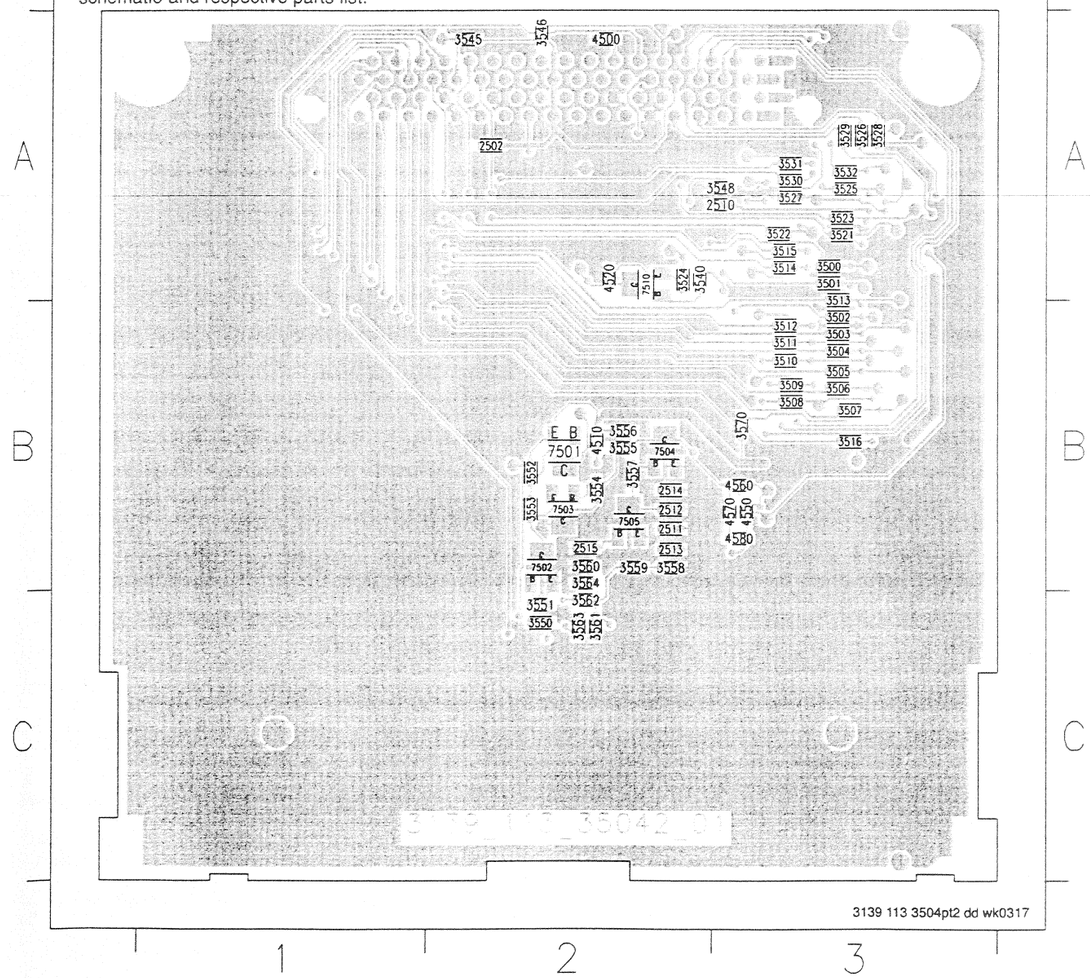

ELECTRICAL PARTS LIST - PCMCIA BOARD

MISCELLANEOUS

	3139 118 56571	PCMCIA Board Assembly
1500	2422 025 18005	Socket PCMCIA 68P
1542	2422 025 17371	Flex Socket 40P

CAPACITORS

2502	2020 552 94427	100pF 5% 50V
2511	3198 017 41050	1uF 10V
2512	3198 017 41050	1uF 10V
2514	3198 017 41050	1uF 10V
2515	3198 017 41050	1uF 10V

RESISTORS

3500	4822 051 30101	100R 5% 0,062W
3501	4822 051 30101	100R 5% 0,062W
3502	4822 051 30101	100R 5% 0,062W
3503	4822 051 30101	100R 5% 0,062W
3504	4822 051 30101	100R 5% 0,062W
3505	4822 051 30101	100R 5% 0,062W
3506	4822 051 30101	100R 5% 0,062W
3507	4822 051 30101	100R 5% 0,062W
3508	4822 051 30101	100R 5% 0,062W
3509	4822 051 30101	100R 5% 0,062W
3510	4822 051 30101	100R 5% 0,062W
3511	4822 051 30101	100R 5% 0,062W
3512	4822 051 30101	100R 5% 0,062W
3513	4822 051 30101	100R 5% 0,062W
3514	4822 051 30101	100R 5% 0,062W
3515	4822 051 30101	100R 5% 0,062W
3516	4822 051 30101	100R 5% 0,062W
3521	4822 051 30101	100R 5% 0,062W
3522	4822 051 30101	100R 5% 0,062W
3523	4822 051 30101	100R 5% 0,062W
3524	4822 051 30101	100R 5% 0,062W
3525	4822 051 30101	100R 5% 0,062W
3526	4822 051 30101	100R 5% 0,062W
3527	4822 051 30101	100R 5% 0,062W
3528	4822 051 30101	100R 5% 0,062W
3529	4822 051 30101	100R 5% 0,062W
3530	4822 051 30101	100R 5% 0,062W
3531	4822 051 30101	100R 5% 0,062W
3532	4822 051 30101	100R 5% 0,062W
3552	4822 051 30103	10k 5% 0,062W
3553	4822 051 30102	1k 5% 0,062W
3554	4822 051 30103	10k 5% 0,062W
3555	4822 051 30101	100R 5% 0,062W
3556	4822 051 30103	10k 5% 0,062W
3557	4822 051 30101	100R 5% 0,062W
3558	4822 051 30474	470k 5% 0,062W
3559	4822 051 30474	470k 5% 0,062W
3560	4822 117 12925	47k 1% 0,063W
3561	4822 051 30472	4k7 5% 0,062W
3562	4822 051 30472	4k7 5% 0,062W
3563	4822 117 13632	100k 1% 0,62W
3564	4822 117 13632	100k 1% 0,62W
4501	4822 051 30008	0R Jumper 0603
4502	4822 051 30008	0R Jumper 0603
4510	4822 051 30008	0R Jumper 0603
4520	4822 051 30008	0R Jumper 0603
4570	4822 051 30008	0R Jumper 0603

TRANSISTORS

7501	5322 130 60845	BC807-25
7503	4822 130 60373	BC857B
7504	5322 130 60159	BC847B
7505	5322 130 60159	BC847B

Note: Only the parts mentioned in this list are normal service spare parts.

FRONT BOARDS

TABLE OF CONTENTS

FTD Display Module pin configuration 6-1
Front Display part - Circuit diagram 6-2
Front Display part - Component & Chip layouts 6-3
Front Display part - Chip layout Part A 6-4
Front Display part - Chip layout Part B 6-5
Front Control part - Chip layout 6-6
Front Control part - Component layout 6-7
Front Control part - Circuit diagram 6-8
DTC Key part - Component & Chip layouts 6-9
DTC Key part - Circuit diagram 6-10
Power Switch part - Circuit diagram 6-10
Power Switch part - Component & Chip layouts 6-11
HDPH & Mic part - Circuit diagram (Non-Karaoke version) 6-12
HDPH & Mic part - Comp. & Chip layouts (Non-Karaoke version) 6-13
HDPH & Mic part - Circuit diagram (Karaoke version) 6-14
HDPH & Mic part - Comp. & Chip layouts (Karaoke version) 6-15
Electrical parts list 6-16

FTD DISPLAY PIN CONFIGURATION

BLOCK DIAGRAM

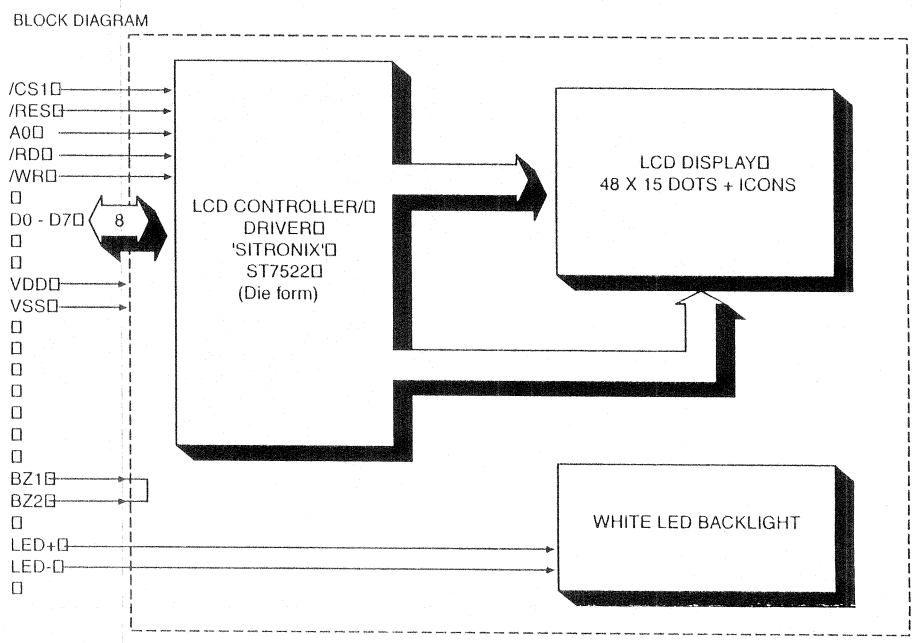

PIN CONFIGURATION

Pin No.	Symbol.	Description
1	VDD	Power supply for logic circuit (+5V)
2	VSS	Ground (0V)
3	/CS1	Input, when /CS1 = 0, the chip select become active
4	/RES	Input low active, System reset
5	A0	Usually connected to the low-order bit of the MPU address bus and used to identify the data or a command. A0=1: D0 - D7 are display data A0=0: D0 - D7 are display control data
6	/RD	For the connection of 80-series MPU: Input, Active low The /RD signal of the 80-series MPU is entered in this pin. When this signal is kept low, the ST7522 data bus is in the output status.
7	/WR	For the connection of 80-series MPU: Input, Active low The /WR signal of the 80-series MPU is entered in this pin. A signal on the data bus is fetched at the rising edge of /WR signal.
8	D0	Data input/output (LSB)
9	D1	Data input/output
10	D2	Data input/output
11	D3	Data input/output
12	D4	Data input/output
13	D5	Data input/output
14	D6	Data input/output
15	D7	Data input/output (MSB)
16	LED+	Anode of backlight
17	LED-	Cathode of backlight
18	BZ1	Bezel ground (connected together)
19	BZ2	Bezel ground (connected together)

FRONT DISPLAY PART - CIRCUIT DIAGRAM

1101 C2	2101 F4	2106 H1	2111 F8	2116 H7	2121 G12	2128 G1	3100 B2	3106 F5	3111 H3	3116 F8	3125 H5	3135 A4	3143 B5	3160 F10	3165 G11	3175 D4	5102 E6	6105 F4	6119 F3	7106 C2
1104 A13	2102 F2	2107 H2	2112 F6	2117 H5	2122 G10	2130 B8	3101 B2	3107 F2	3112 H3	3117 F8	3130 H5	3136 A3	3144 A5	3161 F12	3170 A12	3176 D4	5103 E6	6106 H7	7101 A3	7107 C3
1105 B13	2103 G3	2108 F6	2113 G5	2118 H5	2123 G10	2131 B8	3102 B3	3108 F1	3113 H2	3118 F5	3131 H6	3137 D9	3145 B5	3162 F12	3171 A12	3177 E4	5104 F7	6108 B9	7103 F7	
1106 E13	2104 G1	2109 F6	2114 H4	2119 H7	2124 G11	2132 B9	3103 B3	3109 G3	3114 H2	3119 G8	3132 H5	3141 B5	3158 F10	3163 G12	3172 A12	5100 B9	5105 H2	6113 B9	7104 F6	
1107 A7	2105 G3	2110 F5	2115 H7	2120 H7	2125 G11	2141 F5	3105 F4	3110 G3	3115 F8	3122 H6	3134 A3	3142 A5	3159 F10	3164 G11	3173 B12	5101 C10	6104 A3	6118 F4	7105 H5	

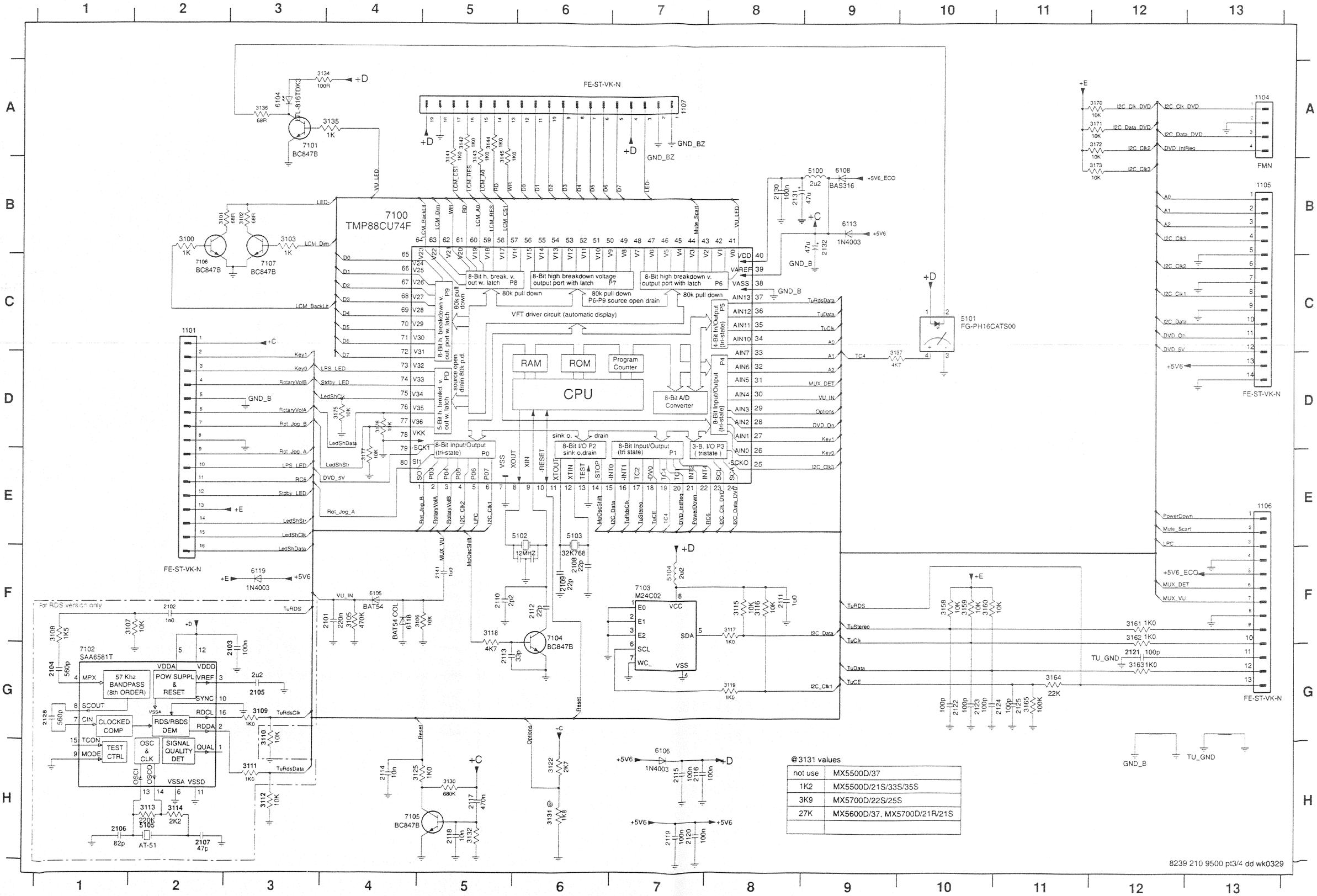

@3131 values

not use	MX5500D/37
1K2	MX5500D/21S/33S/35S
3K9	MX5700D/22S/25S
27K	MX5600D/37, MX5700D/21R/21S

6-4

FRONT DISPLAY PART - CHIPS LAYOUT PART A

This assemby drawing shows a summary of all possible versions. For components used in a specific versi

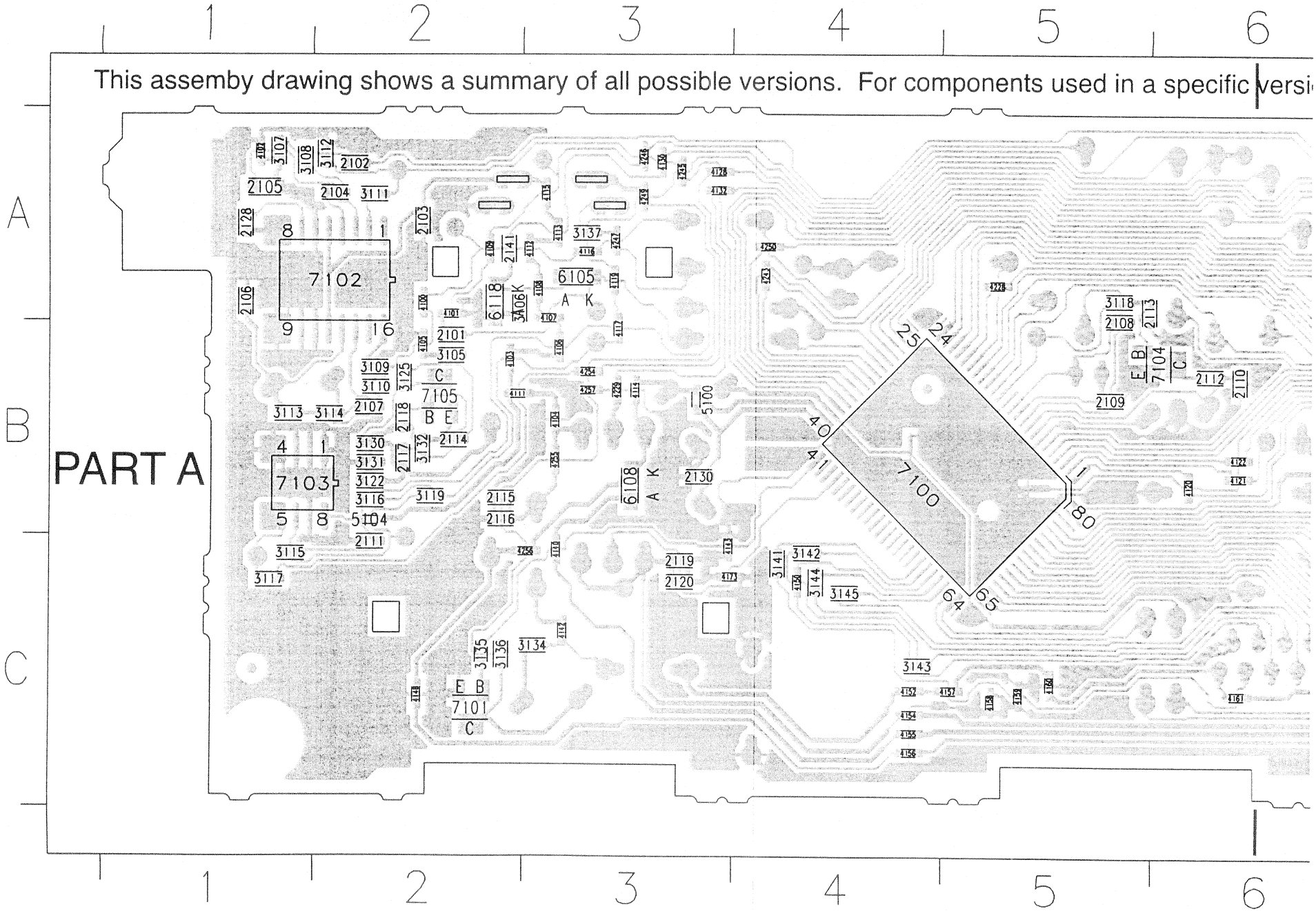

6-3

FRONT DISPLAY PART - COMPONENT & CHIPS LAYOUT

1101	A11	2131	B4	5105	B1	9101	C4	9106	A4	9111	A6	9116	B7	9121	B7	9126	B8	9131	B9	9136	A10	9141	C7	9146	A5
1104	C9	2132	B4	6104	A3	9102	B4	9107	A6	9112	B7	9117	B7	9122	B6	9127	A8	9132	C9	9137	C9	9142	C4	9147	B3
1105	A8	5101	A3	6106	A3	9103	B2	9108	B6	9113	C6	9118	B7	9123	B6	9128	B8	9133	A9	9138	A10	9143	B4	9148	C8
1106	B9	5102	B6	6113	A3	9104	A2	9109	C6	9114	B6	9119	B8	9124	B5	9129	C7	9134	A9	9139	C6	9144	C4	9149	C8
1107	A6	5103	B5	6119	A10	9105	A3	9110	C6	9115	B6	9120	C7	9125	B5	9130	A8	9135	A10	9140	C6	9145	C3		

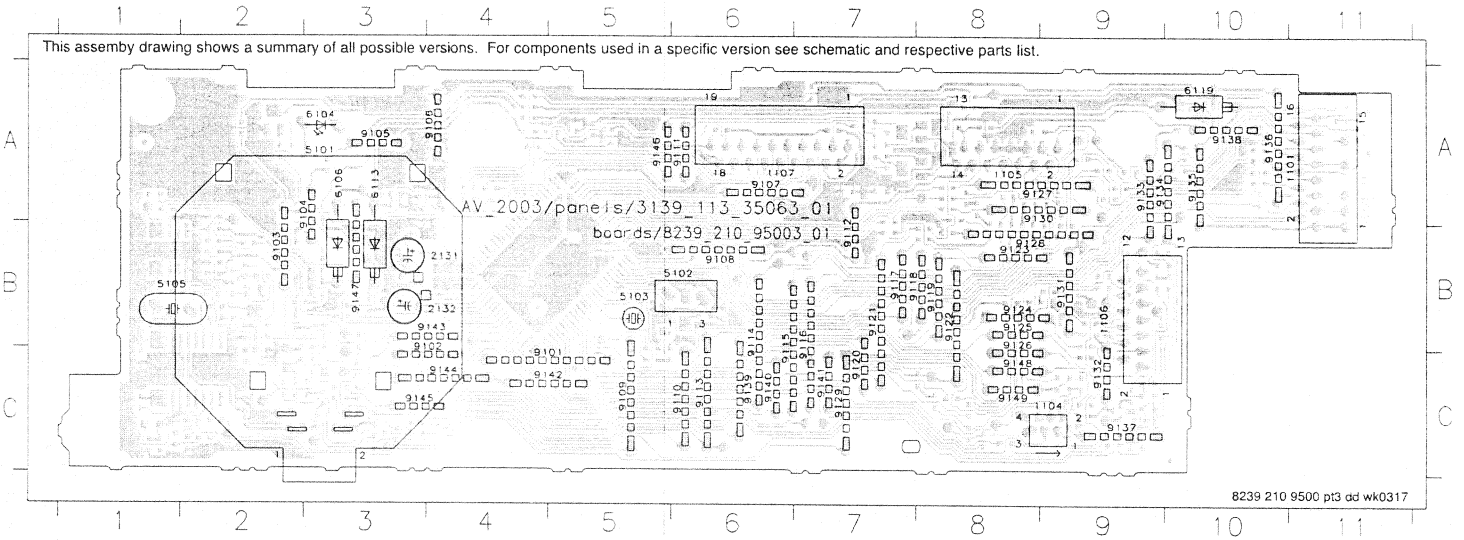

2101	B2	2116	B2	3102	C7	3118	A5	3145	C4	3177	C11	4115	A3	4142	C3	4158	C5	4175	C8	4190	C8	4205	B8	4220	C10	4238	C10	4257	B3
2102	A2	2117	B2	3103	C7	3119	B2	3158	B10	4100	A2	4116	A3	4143	C3	4159	C5	4176	C8	4191	C8	4206	B9	4221	A9	4239	C10	5100	B3
2103	A2	2118	B2	3105	B2	3122	B2	3159	B10	4101	A2	4117	B3	4144	A9	4160	C5	4177	C8	4192	C9	4207	B9	4222	A9	4240	C10	5104	B2
2104	A2	2119	C3	3106	A2	3125	B2	3160	B10	4102	A1	4118	A3	4145	A9	4161	C6	4178	C8	4193	C9	4208	B9	4223	A9	4241	C10	6105	A3
2105	A1	2120	C3	3107	A1	3130	B2	3161	B9	4103	B2	4120	B6	4146	A9	4163	C7	4179	C8	4194	C9	4209	B9	4224	A9	4243	C10	6108	B3
2106	A1	2121	B9	3108	A1	3131	B2	3162	B9	4104	B3	4121	B6	4147	A9	4164	C6	4180	C8	4195	C9	4210	C9	4225	A9	4243	A4	6118	B4
2107	B2	2122	A9	3109	B2	3132	B2	3163	B9	4105	B2	4122	B6	4148	C2	4165	C7	4181	C8	4196	B9	4211	C9	4226	A9	4244	C7	7100	B4
2108	B2	2123	A9	3110	B2	3134	C3	3164	A9	4106	B3	4123	A3	4149	B9	4166	C7	4182	C8	4197	B9	4212	C9	4228	A5	4245	A3	7101	C2
2109	B2	2124	A9	3111	A2	3136	C2	3165	A9	4107	A3	4124	A3	4150	C4	4167	C7	4183	C8	4198	B9	4213	C9	4229	B3	4246	A3	7102	A2
2110	B2	2125	A9	3112	A2	3138	C2	3166	A9	4108	A3	4125	A3	4151	C4	4168	C7	4184	C8	4199	B8	4214	C9	4230	B3	4247	A3	7103	B1
2111	C2	2128	A1	3113	B1	3137	A3	3167	A8	4109	A2	4137	A8	4153	A8	4170	B7	4185	C8	4200	B8	4215	C10	4233	B6	4249	A2	7104	B6
2112	B6	2130	B3	3114	B2	3141	C4	3172	C8	4111	B2	4138	A8	4154	C4	4171	B8	4186	C8	4201	B8	4216	C10	4234	B9	4250	A4	7105	B6
2113	B2	2141	A2	3115	C2	3142	C4	3173	A8	4112	A3	4139	A8	4155	C4	4172	B8	4187	B8	4202	B9	4217	C10	4235	B9	4254	B3	7106	C7
2114	B2	3100	C7	3116	B2	3143	C4	3174	C11	4113	A3	4140	C8	4156	C4	4173	C8	4188	C8	4203	B8	4218	C10	4236	C10	4255	B3	7107	C7
2115	B2	3101	C7	3117	C1	3144	C4	3176	C11	4114	B3	4141	A8	4157	C5	4174	B8	4189	C8	4204	B8	4219	C10	4237	C10	4256	C3		

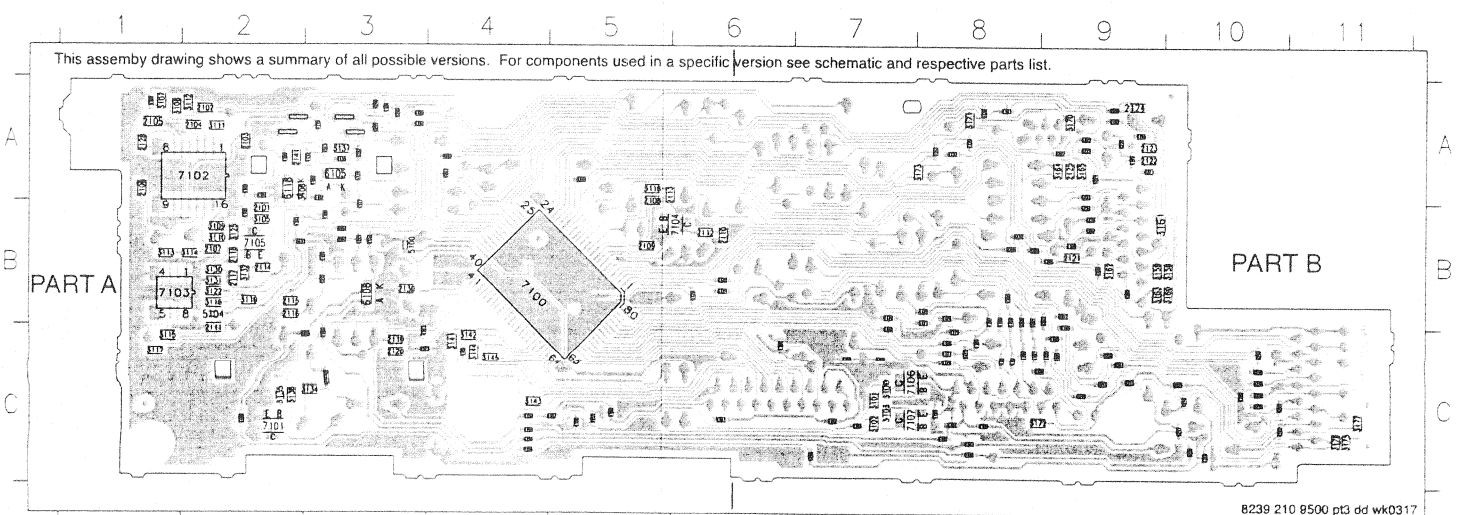

6-5

FRONT DISPLAY PART - CHIPS LAYOUT PART B

specific version see schematic and respective parts list.

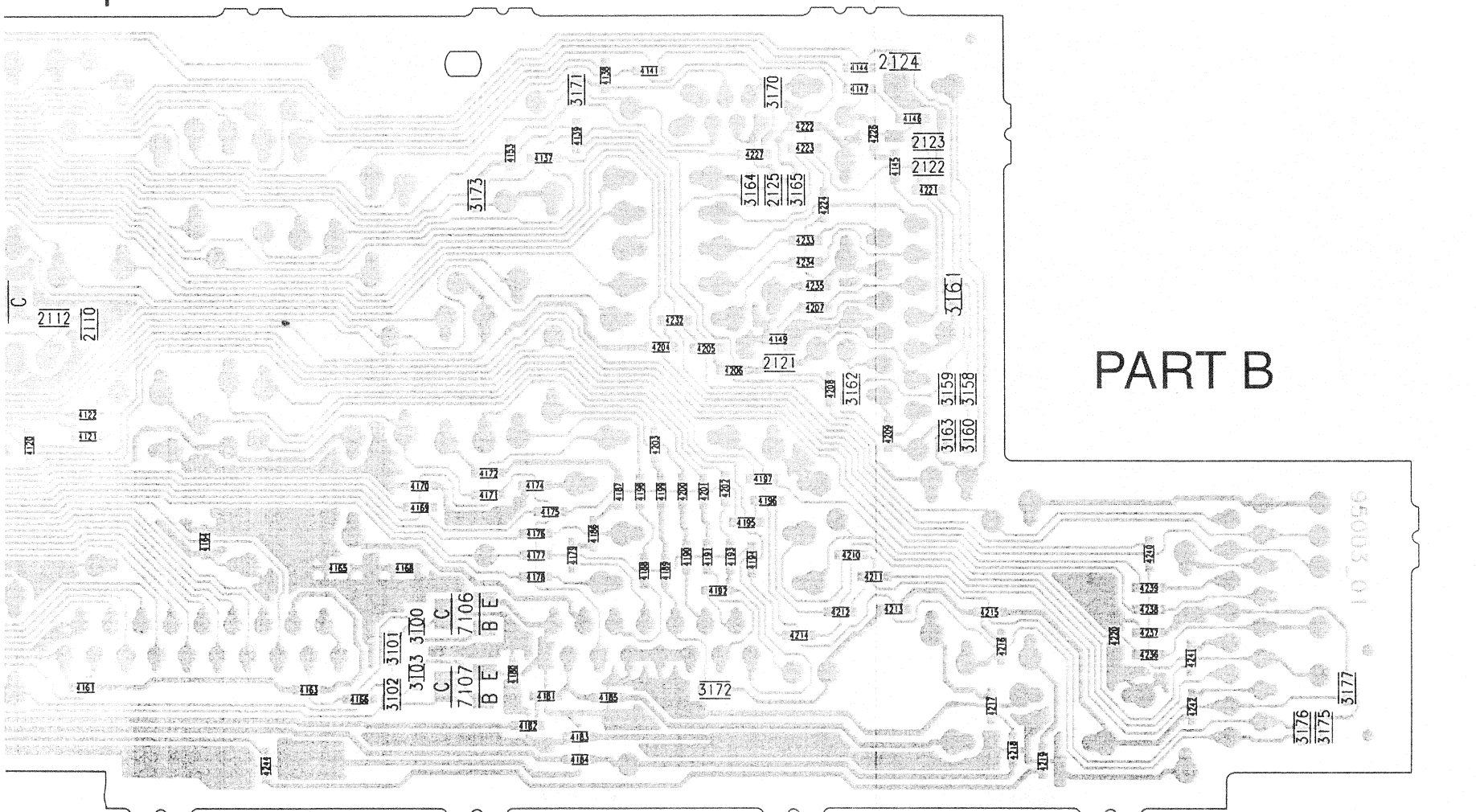

8239 210 9500 pt3 dd wk0317

6-6

FRONT CONTROL PART - CHIPS LAYOUT

2304 B2	3304 A5	3312 B1	3337 A2	3345 A2	4301 B2	4309 A1	4317 A2	4325 A2	4337 B3	7303 A1
2305 B2	3305 A5	3330 A4	3338 A2	3346 A2	4302 A4	4310 A3	4318 B2	4326 A2	4338 A3	7304 A1
2306 B4	3306 A5	3331 A2	3339 A2	3347 A1	4303 A3	4311 B1	4319 A3	4327 A1	4339 A3	7305 B2
2307 B3	3307 A4	3332 A2	3340 A1	3348 B1	4304 A1	4312 B1	4320 A2	4328 A1	4342 B2	7306 B2
2308 A3	3308 B4	3333 A2	3341 B1	3349 B2	4305 A3	4313 A3	4321 A2	4329 A4	4343 A2	7307 B1
2309 B3	3309 B4	3334 B3	3342 B2	3350 B2	4306 A1	4314 A3	4322 A2	4330 A2	7300 B3	7308 B1
2310 A4	3310 B5	3335 B4	3343 B2	3351 B2	4307 A1	4315 A3	4323 A2	4332 A3	7301 A2	
3303 A4	3311 B5	3336 B3	3344 B2	3352 B1	4308 A3	4316 A3	4324 A2	4334 A3	7302 A1	

This assemby drawing shows a summary of all possible versions. For components used in a specific version see schematic and respective parts list.

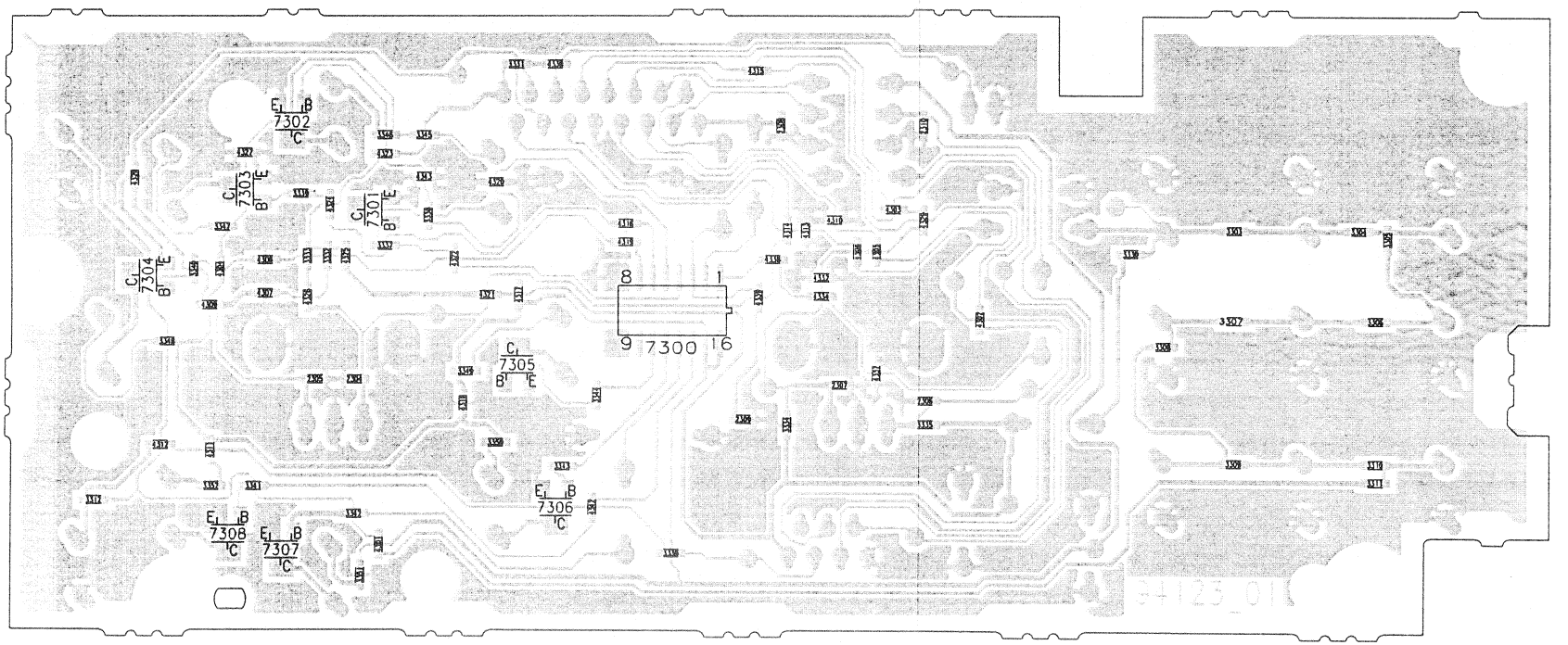

8239 210 9412 pt3 dd wk0317

6-7

FRONT CONTROL PART - COMPONENT LAYOUT

1300 A4	1304 B1	1308 B1	1313 B3	6300 A4	6304 B4	9301 B2	9305 A2	9309 A2	9313 A3
1301 A2	1305 B1	1309 B1	1314 B4	6301 A4	6305 B4	9302 B2	9306 A3	9310 B3	9314 A3
1302 A1	1306 B2	1310 A5	1315 A3	6302 A5	6306 B4	9303 A3	9307 B2	9311 B3	9315 A4
1303 A1	1307 B2	1311 B5	1316 A2	6303 B5	6307 B5	9304 A3	9308 A2	9312 A3	

This assemby drawing shows a summary of all possible versions. For components used in a specific version see schematic and respective parts list.

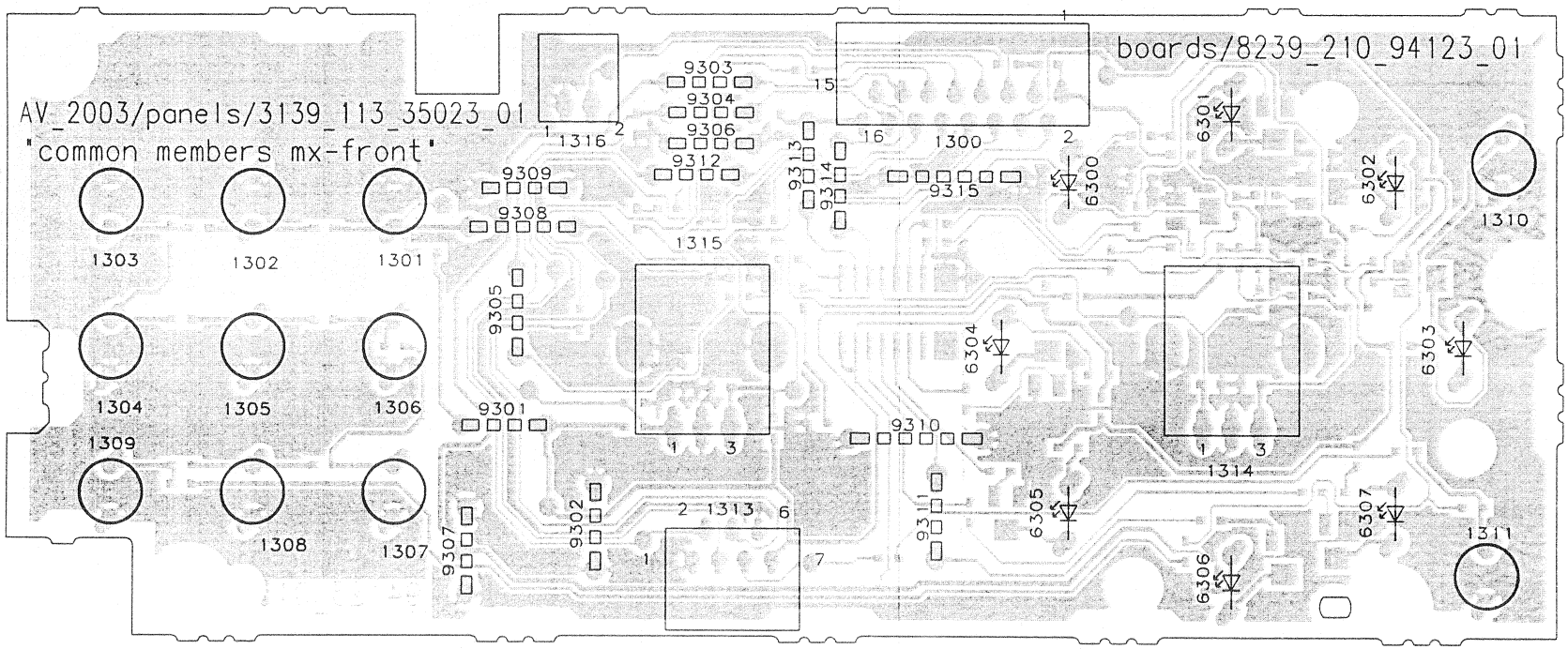

8239 210 9412 pt3 dd wk0317

6-8

FRONT CONTROL PART - CIRCUIT DIAGRAM

1300 A1	1304 A5	1308 A6	1313 C1	2304 B5	2308 D3	3304 A4	3308 A5	3312 A7	3333 A1	3337 D5	3341 D5	3345 C6	3349 E6	6300 C6	6304 E6	7300 C5	7304 C8	7308 E8
1301 A3	1305 A5	1309 A6	1314 B4	2305 B5	2309 D3	3305 A4	3309 A6	3330 A1	3334 A1	3338 D5	3342 D5	3346 C7	3350 E7	6301 C7	6305 E7	7301 C6	7305 E6	
1302 A4	1306 A5	1310 A7	1315 B3	2306 B4	2310 D4	3306 A5	3310 A6	3331 A1	3335 A1	3339 D5	3343 D5	3347 C7	3351 E7	6302 C8	6306 E8	7302 C7	7306 E7	
1303 A4	1307 A6	1311 A7	1316 E1	2307 B4	3303 A4	3307 A5	3311 A7	3332 A1	3336 A7	3340 D5	3344 E5	3348 C8	3352 E8	6303 C8	6307 E8	7303 C7	7307 E7	

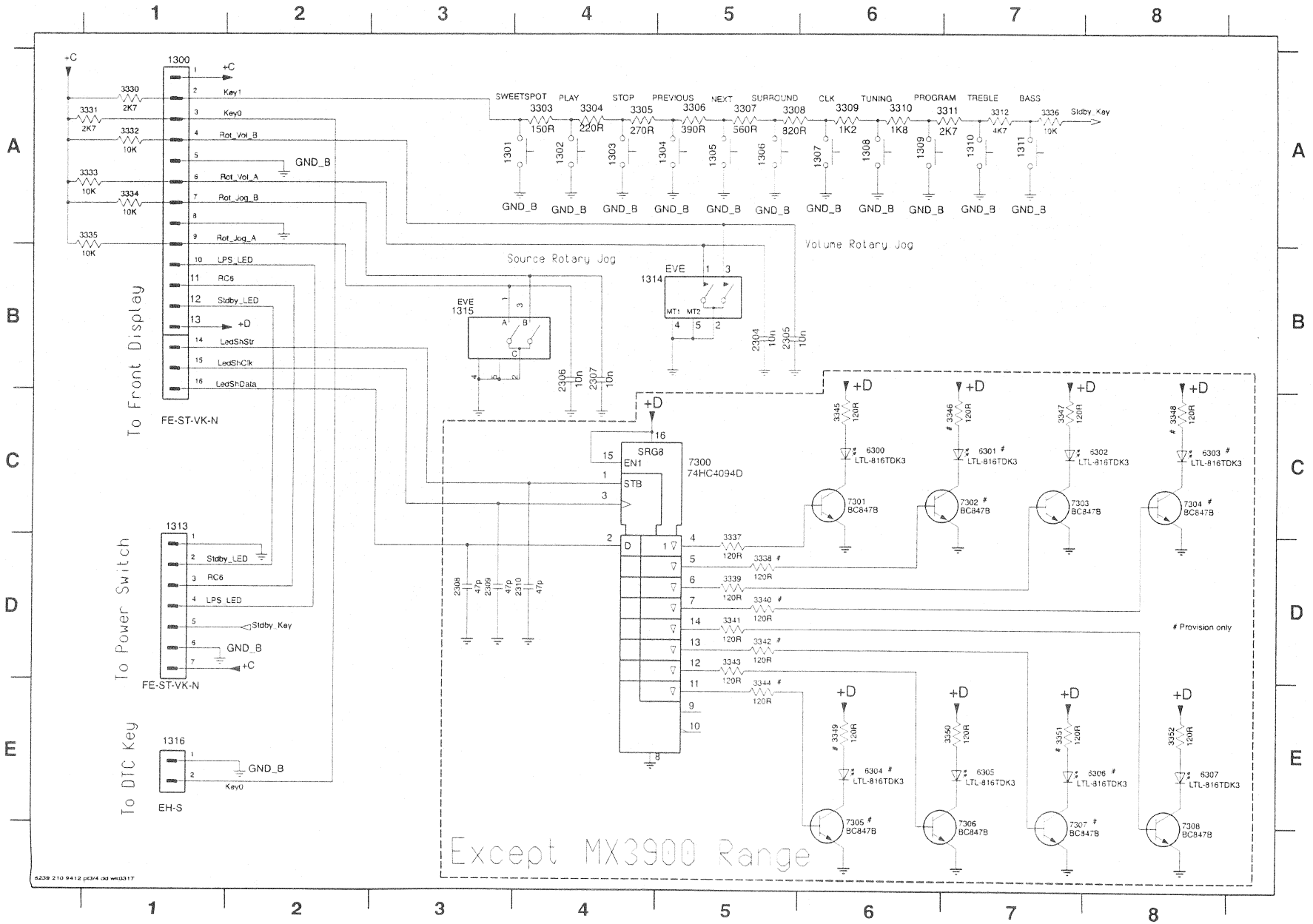

6-9

DTC KEY PART - COMPONENT & CHIP LAYOUTS

1400 A12 1401 A2 1402 A3 1403 A5 1404 A7 1405 A10

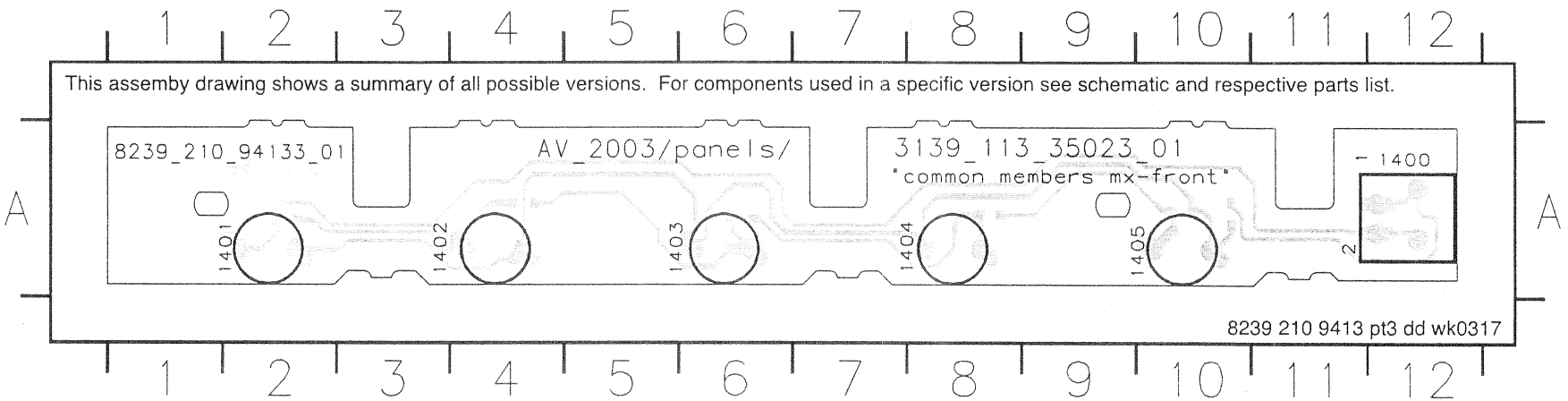

2400 A10 3400 A2 3401 A4 3402 A6 3403 A8 4400 A10

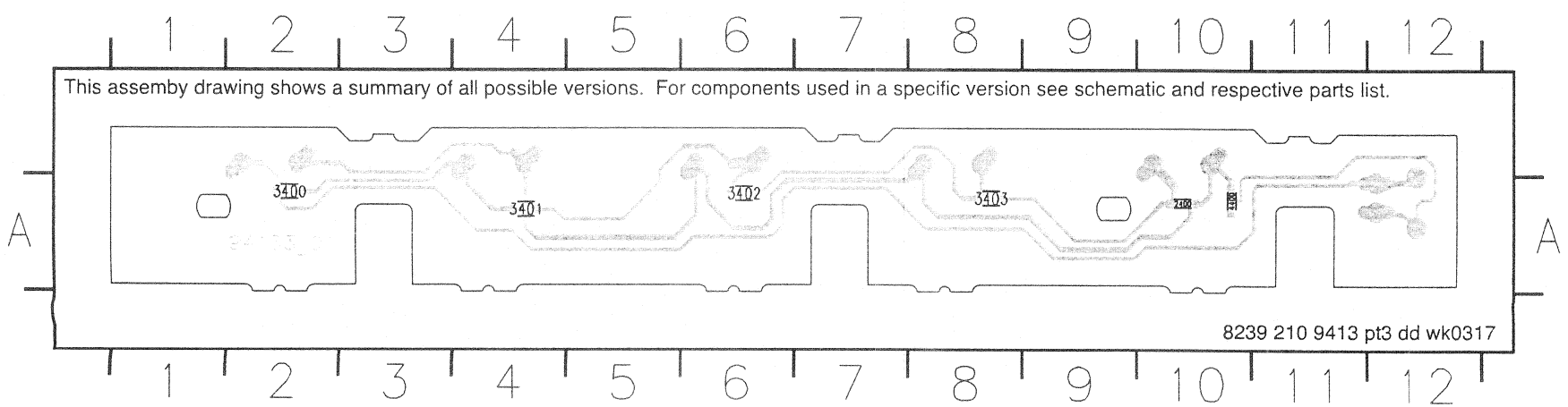

DTC KEY PART - CIRCUIT DIAGRAM

1400 A1 1402 A2 1404 A3 2400 A3 3401 A2 3403 A3
1401 A2 1403 A2 1405 A3 3400 A2 3402 A3

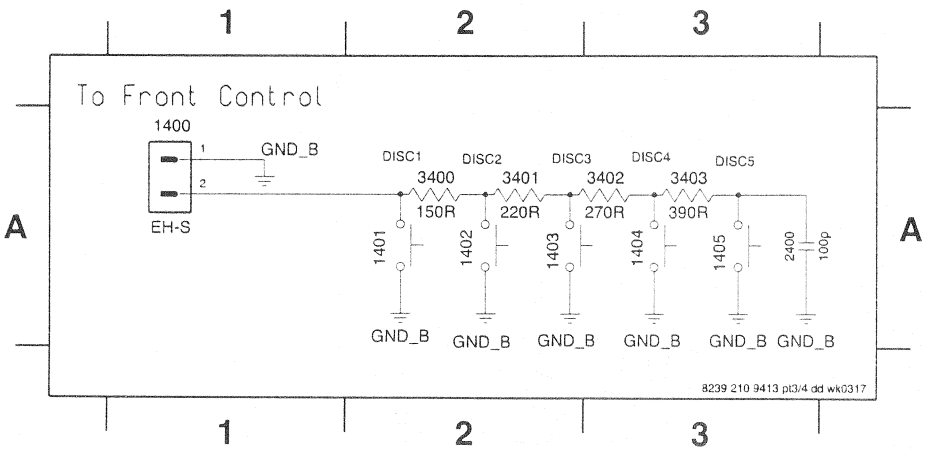

POWER SWITCH PART - CIRCUIT DIAGRAM

1500 B1 2501 B2 3501 C3 3503 B2 3505 A2 6500 C3 7500 C3 7504 A2
1501 C1 2502 C2 3502 A2 3504 B2 3506 C3 6501 A3 7501 B3

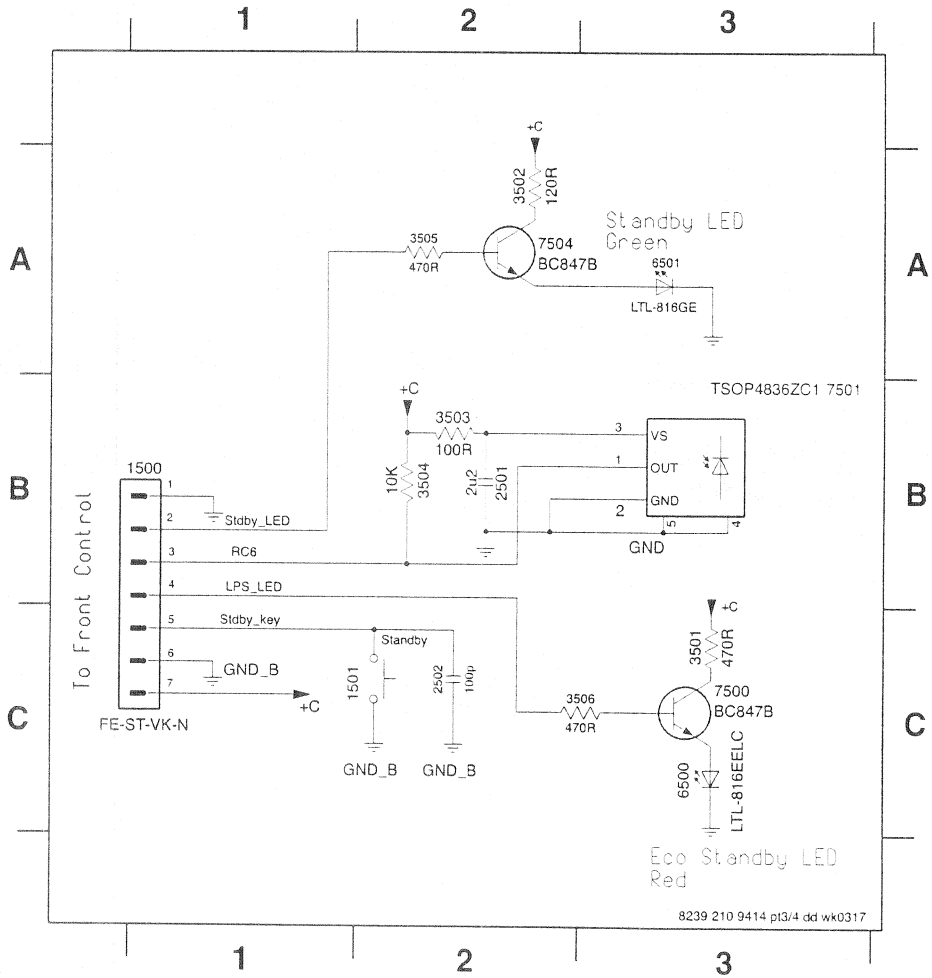

POWER SWITCH PART - COMPONENT & CHIPS LAYOUT

1500	A1	6500	C1	7501	B2	9501	A1
1501	C2	6501	C2	9500	A1	9502	B1

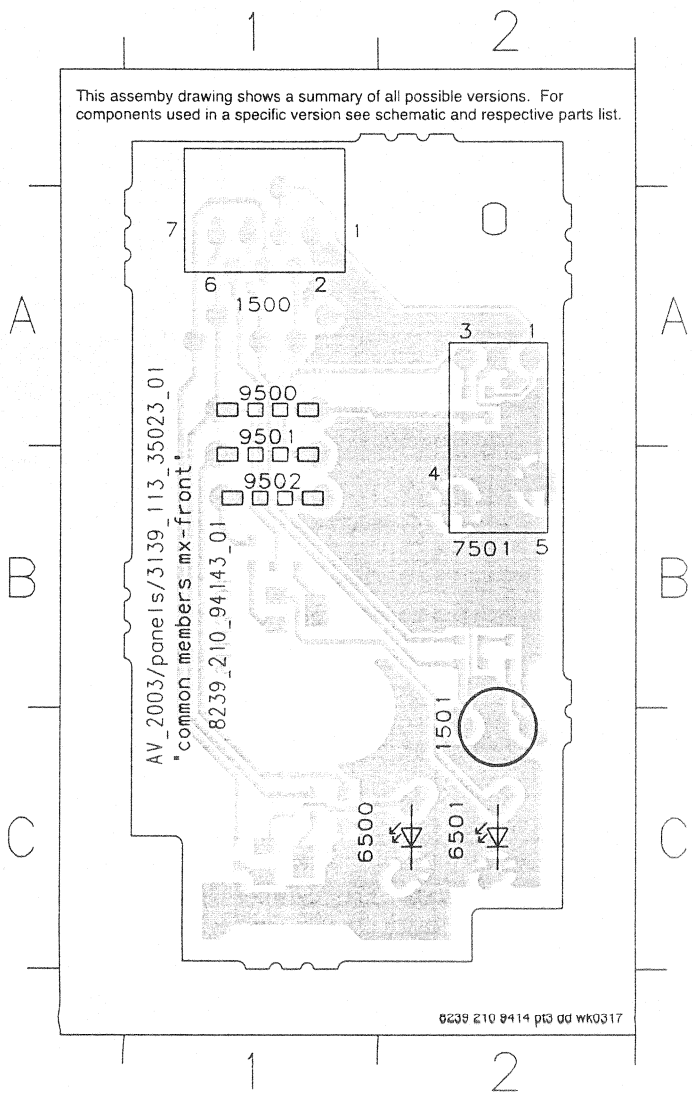

2501	C2	3502	B2	3505	B2	4501	B1
2502	B1	3503	A1	3506	C2	7500	C2
3501	C2	3504	A1	4500	B1	7504	B2

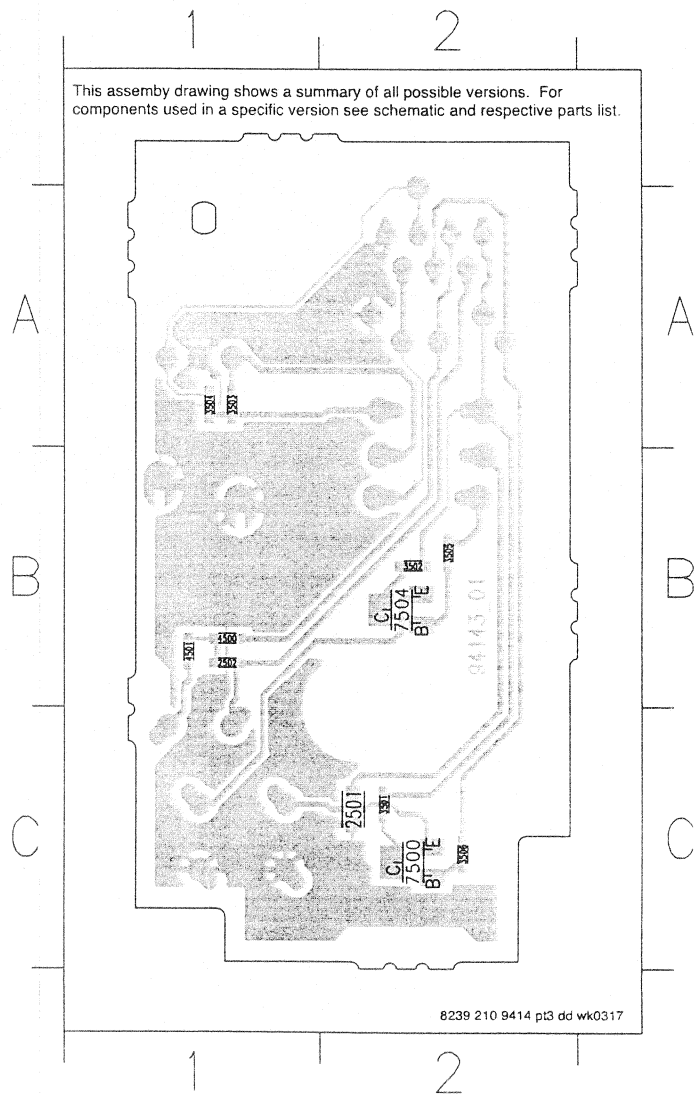

6-12

HDPH & MIC PART - CIRCUIT DIAGRAM (For non-Karaoke version pt 3 pcb only)

1600 A3	1602 A6	1604 B5	2600 A4	2602 A5	2604 B4	2606 C3	2608 C4	2610 C4	3605 C4	3607 B5	3609 B5	3611 C5	3613 C2	3615 C5	5603 B5	5605 A6	7600 C3
1601 A6	1603 C1	1605 B4	2601 A5	2603 B4	2605 C5	2607 C3	2609 C2	2611 A4	3606 B3	3608 C3	3610 C3	3612 C4	3614 C3	5600 A6	5604 A6	5606 A6	7601 C5

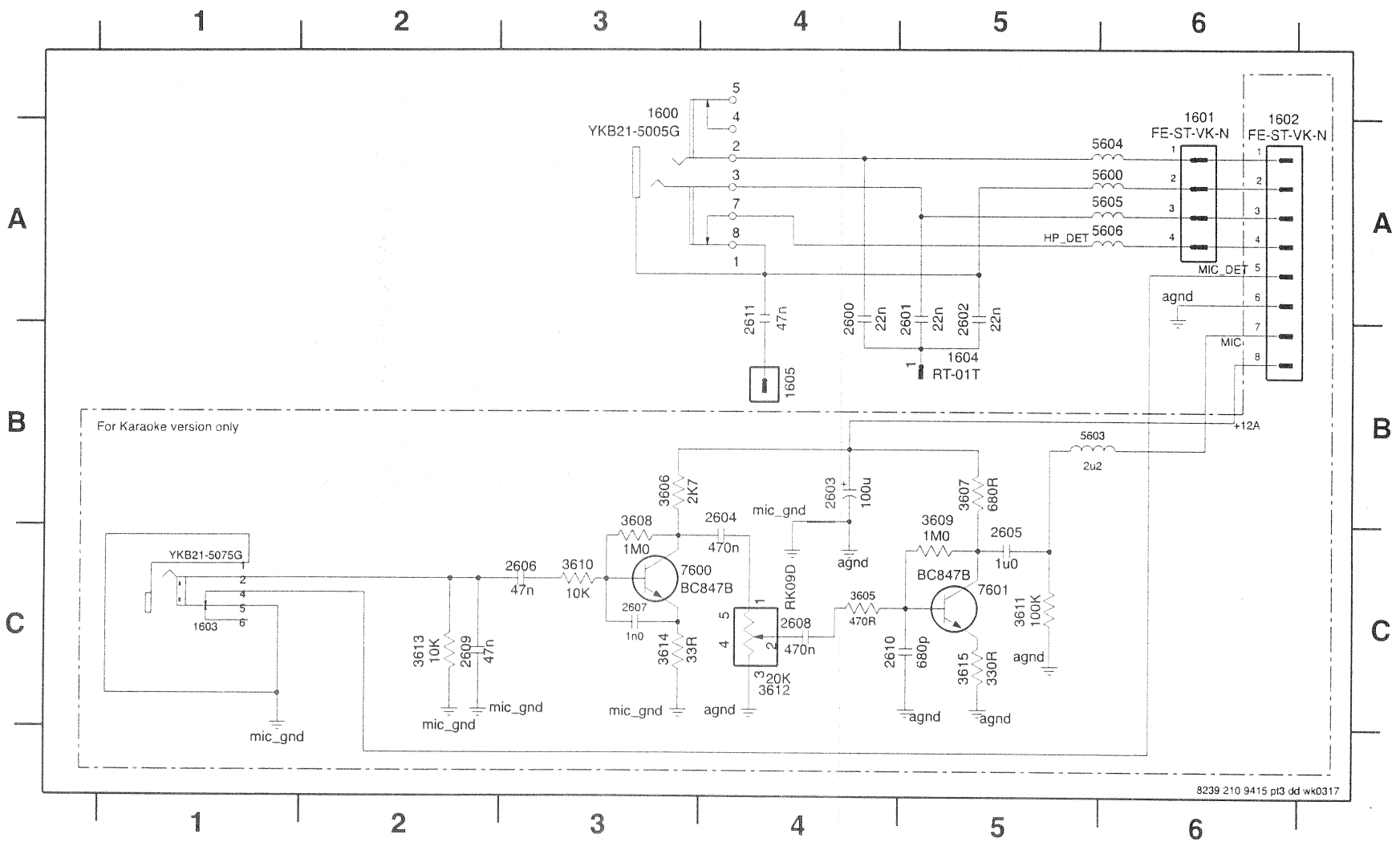

HDPH & MIC PART - COMPONENT & CHIP LAYOUTS (For non-Karaoke version pt 3 pcb only)

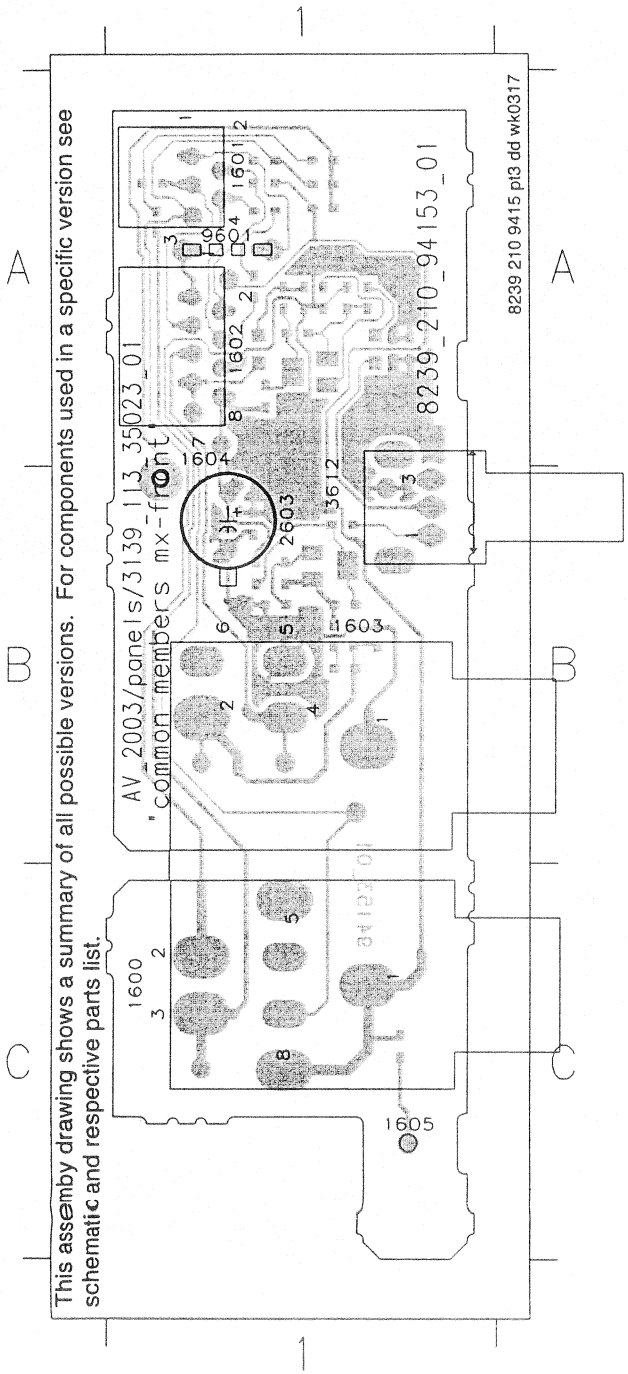

1600	C	1
1601	A	1
1602	A	1
1603	B	1
1604	A	1
1605	C	1
2603	B	1
3612	B	1
9601	A	1

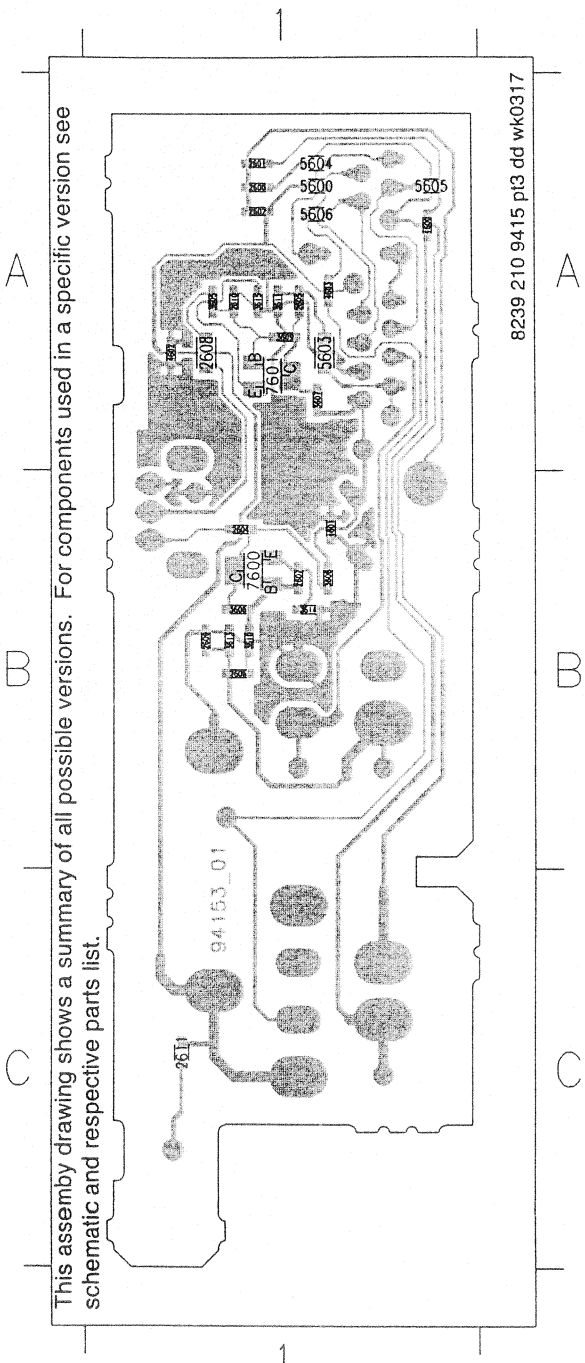

2600	A	1
2601	A	1
2602	A	1
2604	B	1
2605	A	1
2606	B	1
2607	B	1
2608	A	1
2609	B	1
2610	A	1
2611	C	1
3605	A	1
3606	B	1
3607	A	1
3608	B	1
3609	A	1
3610	B	1
3611	A	1
3613	B	1
3614	B	1
3615	A	1
4600	A	1
4601	B	1
4602	A	1
4603	A	1
5600	A	1
5603	A	1
5604	A	1
5605	A	1
5606	A	1
7600	B	1
7601	A	1

6-14

HDPH & MIC PART - CIRCUIT DIAGRAM (For all versions pt 4 pcb)

1600 A3	1602 A6	1604 B5	2600 B5	2602 B5	2604 C4	2606 C3	2608 C4	2610 C4	3605 C4	3607 B5	3609 C5	3611 C5	3613 C2	3615 C5	5603 B5	5605 A4	7600 C3
1601 A6	1603 C1	1605 B4	2601 B5	2603 B4	2605 C5	2607 C3	2609 C2	2611 B4	3606 B3	3608 C3	3610 C3	3612 C4	3614 C3	5600 A4	5604 A4	5606 A4	7601 C5

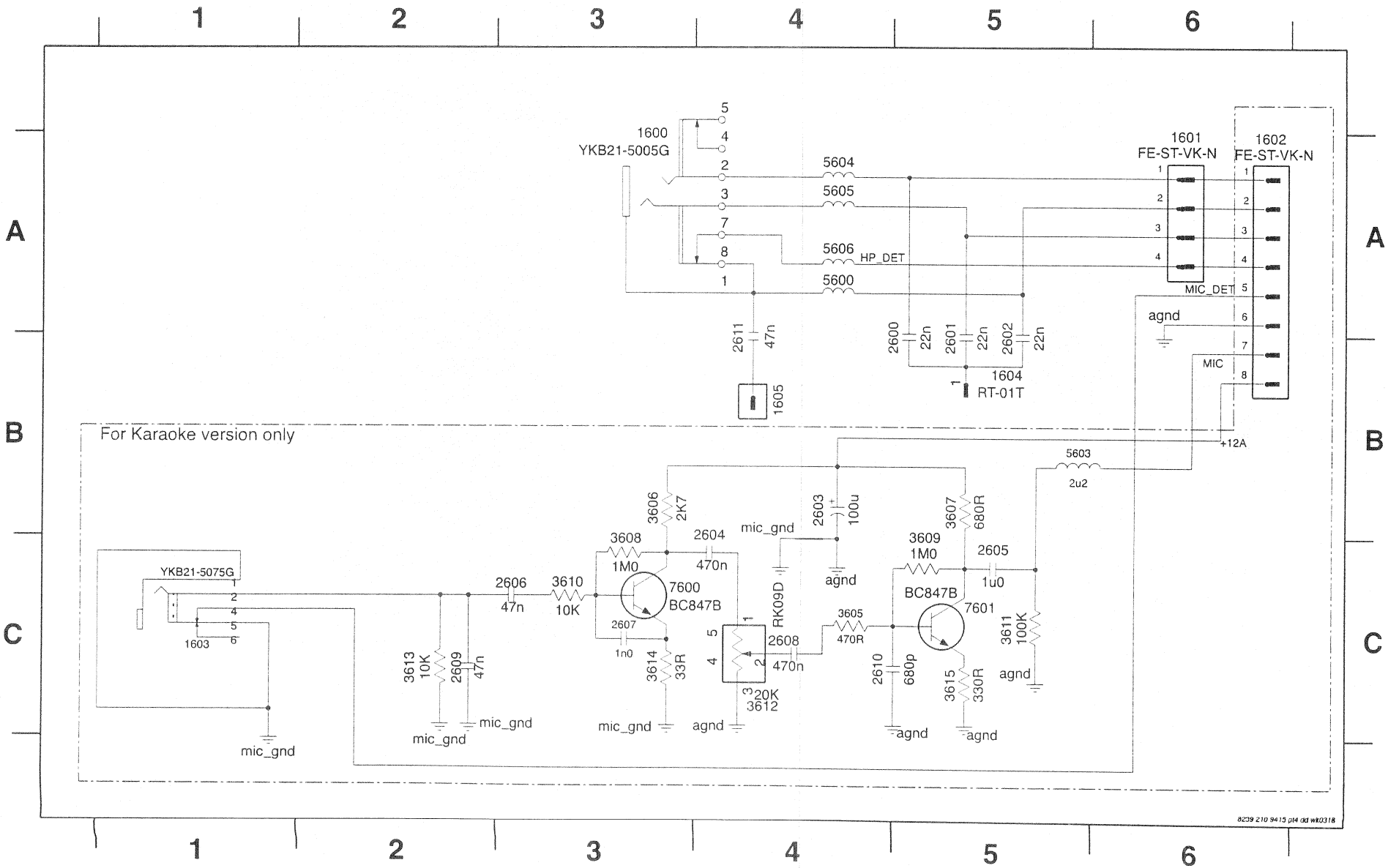

HDPH & MIC PART - COMPONENT & CHIP LAYOUTS (For all versions pt 4 pcb)

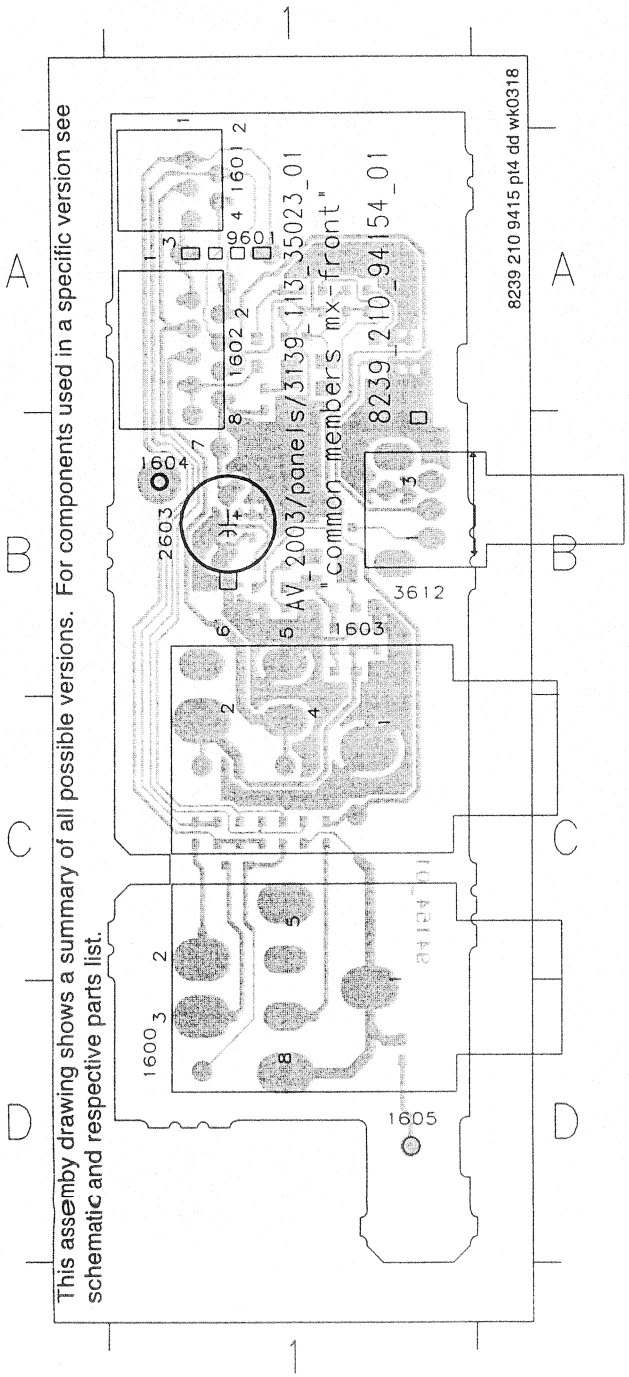

1600	D1
1601	A1
1602	A1
1603	B1
1604	B1
1605	D1
2603	B1
3612	B1
9601	A1

6-15

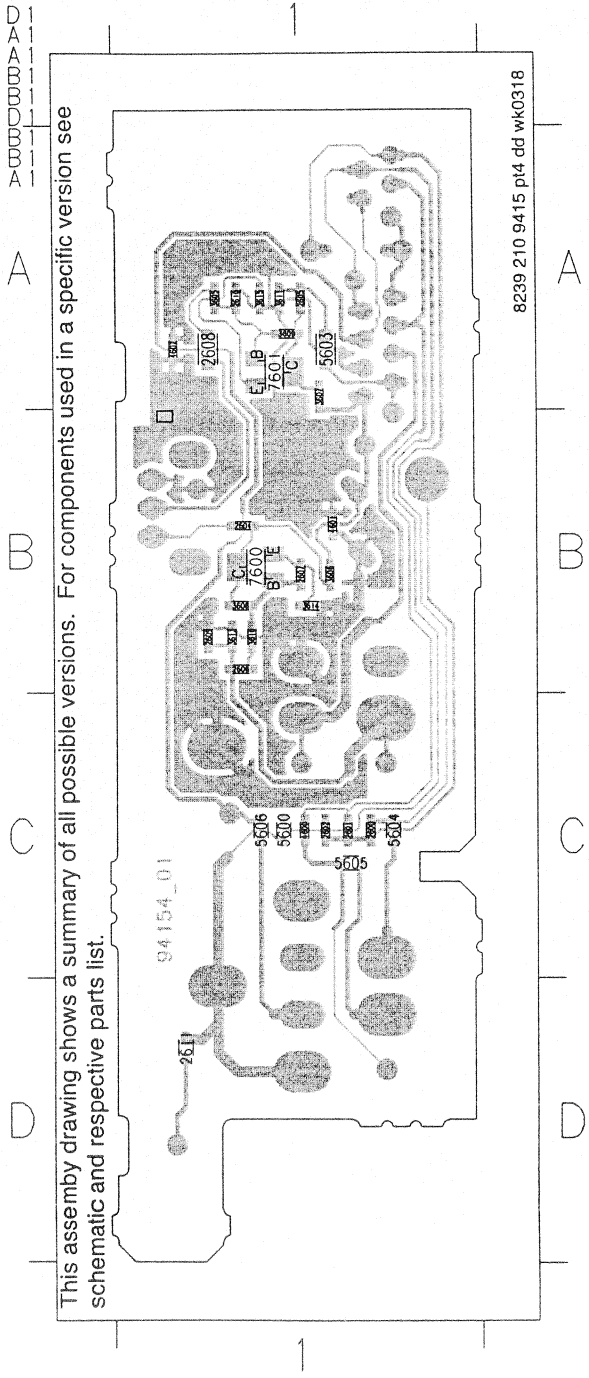

2600	C1
2601	C1
2602	C1
2604	B1
2605	A1
2606	B1
2607	B1
2608	A1
2609	B1
2610	A1
2611	D1
3605	A1
3606	B1
3607	A1
3608	B1
3609	A1
3610	B1
3611	A1
3613	B1
3614	B1
3615	A1
4600	C1
4601	B1
4602	A1
5600	C1
5603	A1
5604	C1
5605	C1
5606	C1
7600	B1
7601	A1

ELECTRICAL PARTS LIST - FRONT BOARDS

MISCELLANEOUS

	3139 119 00831	LCD Module MX5500D-01	
1101	2422 025 14546	Flex Socket 16P	
1104	2422 025 16979	Flex Socket 4P	
1105	2422 025 14544	Flex Socket 14P	
1106	4822 267 10756	Flex Socket 13P	
1107	4822 265 11545	Flex Socket 19P	
1300	2422 025 14546	Flex Socket 16P	
1301	4822 276 13775	Tact Switch	
1302	4822 276 13775	Tact Switch	
1303	4822 276 13775	Tact Switch	
1304	4822 276 13775	Tact Switch	
1305	4822 276 13775	Tact Switch	
1306	4822 276 13775	Tact Switch	
1307	4822 276 13775	Tact Switch	
1308	4822 276 13775	Tact Switch	
1309	4822 276 13775	Tact Switch	
1310	4822 276 13775	Tact Switch	
1311	4822 276 13775	Tact Switch	
1313	4822 267 10956	Flex Socket 7P	
1314	2422 129 16975	Rot Encoder 12P EVEMC2F2512B B	
1315	2422 129 16974	Rot Encoder 12P EVEGC1F2512B B	
1401	4822 276 13775	Tact Switch	
1402	4822 276 13775	Tact Switch	
1403	4822 276 13775	Tact Switch	
1404	4822 276 13775	Tact Switch	
1405	4822 276 13775	Tact Switch	
1500	4822 267 10956	Flex Socket 7P	
1501	4822 276 13775	Tact Switch	
1600	2422 026 05192	Headphone Socket	
1601	4822 265 11183	Flex Socket 4P	non-kara
1602	4822 265 11535	Flex Socket 8P	kara
1603	2422 026 05372	Mic Socket	kara

CAPACITORS

2101	4822 126 13879	220nF +80/-20% 16V	
2102	3198 016 31020	1nF 25V	RDS
2103	2238 586 59812	100nF +80/-20% 50V	RDS
2104	4822 126 14249	560pF 25V	RDS
2105	4822 126 14491	2,2uF 10V	RDS
2106	4822 126 14226	82pF 50V	RDS
2107	4922 126 11785	47PF 50V	RDS
2108	4822 122 33761	22pF 5% 50V	
2109	4822 122 33761	22pF 5% 50V	
2110	4822 126 14223	2,2pF +/-0,25pF 50V	
2111	3198 017 41050	1uF 10V	
2112	4822 122 33761	22pF 5% 50V	
2113	2222 867 15339	33pF 5% 50V	
2114	5322 126 11583	10nF 10% 50V	
2115	2238 586 59812	100nF +80/-20% 50V	
2116	2238 586 59812	100nF +80/-20% 50V	
2117	3198 017 44740	470nF 10V	
2118	5322 126 11583	10nF 10% 50V	
2119	2238 586 59812	100nF +80/-20% 50V	
2120	2238 586 59812	100nF +80/-20% 50V	
2121	2020 552 94427	100pF 5% 50V	
2122	2020 552 94427	100pF 5% 50V	
2123	2020 552 94427	100pF 5% 50V	
2124	2020 552 94427	100pF 5% 50V	
2125	2020 552 94427	100pF 5% 50V	
2128	4822 126 14249	560pF 25V	RDS
2130	2238 586 59812	100nF +80/-20% 50V	
2131	4822 124 80483	47uF 20% 6,3V	
2132	4822 124 80483	47uF 20% 6,3V	
2141	3198 017 41050	1uF 10V	
2304	5322 126 11583	10nF 10% 50V	
2305	5322 126 11583	10nF 10% 50V	
2306	5322 126 11583	10nF 10% 50V	
2307	5322 126 11583	10nF 10% 50V	
2308	4822 126 11785	47pF 5% 50V	
2309	4822 126 11785	47pF 5% 50V	
2310	4822 126 11785	47pF 5% 50V	
2400	2020 552 94427	100pF 5% 50V	
2501	4822 126 14491	2,2uF 10V 0805	
2502	2020 552 94427	100pF 5% 50V	
2600	2238 916 15641	22nF 10% 25V	
2601	2238 916 15641	22nF 10% 25V	
2602	2238 916 15641	22nF 10% 25V	
2603	4822 124 41643	100uF 20% 16V	kara
2604	3198 017 44740	470nF 10V	kara
2605	3198 017 41050	1uF 10V	kara
2606	3198 017 34730	47nF 16V	kara
2607	3198 016 31020	1nF 25V	kara
2608	4822 126 13482	470nF +80/-20% 16V	kara
2609	3198 017 34730	47nF 16V	kara
2610	3198 016 36810	680pF 25V	kara
2611	3198 017 34730	47nF 16V	

RESISTORS

3100	4822 051 30102	1k 5% 0,062W	
3101	4822 051 30689	68R 5% 0,063W	
3102	4822 051 30689	68R 5% 0,063W	
3103	4822 051 30102	1k 5% 0,062W	
3105	4822 051 30474	470k 5% 0,062W	
3106	4822 051 30103	10k 5% 0,062W	
3107	4822 051 30103	10k 5% 0,062W	RDS
3108	4822 051 30152	1k5 5% 0,062W	RDS
3109	4822 051 30102	1k 5% 0,062W	RDS
3110	4822 051 30103	10k 5% 0,062W	non-RDS
3111	4822 051 30102	1k 5% 0,062W	RDS
3112	4822 051 30103	10k 5% 0,062W	non-RDS
3113	4822 117 12891	220k 5% 0,062W	RDS
3114	4822 051 30222	2k2 5% 0,062W	RDS
3115	4822 051 30103	10k 5% 0,062W	
3116	4822 051 30103	10k 5% 0,062W	

6-16

ELECTRICAL PARTS LIST - FRONT BOARDS

3117	4822 051 30102	1k 5% 0,062W	
3118	4822 051 30472	4k7 5% 0,062W	
3119	4822 051 30102	1k 5% 0,062W	
3122	4822 051 30272	2k7 5% 0,062W	
3125	4822 051 30102	1k 5% 0,062W	
3130	4822 051 30684	680k 5% 0,062W	
3131	4822 117 11817	1k2 5% 0,062W	see circuit
3131	4822 051 30392	3k9 5% 0,062W	see circuit
3131	4822 051 30273	27k 5% 0,062W	see circuit
3132	4822 051 30684	680k 5% 0,062W	
3134	4822 051 30101	100R 5% 0,062W	
3135	4822 051 30102	1k 5% 0,062W	
3136	4822 051 30689	68R 5% 0,063W	
3137	4822 051 30472	4k7 5% 0,062W	
3141	4822 051 30102	1k 5% 0,062W	
3142	4822 051 30102	1k 5% 0,062W	
3143	4822 051 30102	1k 5% 0,062W	
3144	4822 051 30102	1k 5% 0,062W	
3145	4822 051 30102	1k 5% 0,062W	
3158	4822 051 30103	10k 5% 0,062W	
3159	4822 051 30103	10k 5% 0,062W	
3160	4822 051 30103	10k 5% 0,062W	
3161	4822 051 30102	1k 5% 0,062W	
3162	4822 051 30102	1k 5% 0,062W	
3163	4822 051 30102	1k 5% 0,062W	
3164	4822 051 30223	22k 5% 0,062W	
3165	4822 117 13632	100k 1% 0,62W	
3170	4822 051 30103	10k 5% 0,062W	
3171	4822 051 30103	10k 5% 0,062W	
3172	4822 051 30103	10k 5% 0,062W	
3173	4822 051 30103	10k 5% 0,062W	
3175	4822 051 30103	10k 5% 0,062W	
3176	4822 051 30103	10k 5% 0,062W	
3177	4822 051 30103	10k 5% 0,062W	
3303	4822 051 30151	150R 5% 0,062W	
3304	4822 051 30221	220R 5% 0,062W	
3305	4822 051 30271	270R 5% 0,062W	
3306	4822 051 30391	390R 5% 0,062W	
3307	4822 051 30561	560R 5% 0,062W	
3308	4822 117 12968	820R 5% 0,62W	
3309	4822 117 11817	1k2 1% 1/16W	
3310	4822 117 12903	1K8 1% 0,063W	
3311	4822 051 30272	2k7 5% 0,062W	
3312	4822 051 30472	4k7 5% 0,062W	
3330	4822 051 30272	2k7 5% 0,062W	
3331	4822 051 30272	2k7 5% 0,062W	
3332	4822 051 30103	10k 5% 0,062W	
3333	4822 051 30103	10k 5% 0,062W	
3334	4822 051 30103	10k 5% 0,062W	
3335	4822 051 30103	10k 5% 0,062W	
3336	4822 051 30103	10k 5% 0,062W	
3337	4822 051 30121	120R 5% 0,062W	
3339	4822 051 30121	120R 5% 0,062W	
3341	4822 051 30121	120R 5% 0,062W	
3343	4822 051 30121	120R 5% 0,062W	
3345	4822 051 30121	120R 5% 0,062W	
3347	4822 051 30121	120R 5% 0,062W	
3350	4822 051 30121	120R 5% 0,062W	
3352	4822 051 30121	120R 5% 0,062W	
3400	4822 051 30151	150R 5% 0,062W	
3401	4822 051 30221	220R 5% 0,062W	
3402	4822 051 30271	270R 5% 0,062W	
3403	4822 051 30391	390R 5% 0,062W	
3501	4822 051 30471	470R 5% 0,062W	
3502	4822 051 30121	120R 5% 0,062W	
3503	4822 051 30101	100R 5% 0,062W	
3504	4822 051 30103	10k 5% 0,062W	
3505	4822 051 30471	470R 5% 0,062W	
3506	4822 051 30471	470R 5% 0,062W	
3605	4822 051 30471	470R 5% 0,062W	kara
3606	4822 051 30272	2k7 5% 0,062W	kara
3607	4822 051 30681	680R 5% 0,062W	kara
3608	4822 051 30105	1M 5% 0,062W	kara
3609	4822 051 30105	1M 5% 0,062W	kara
3610	4822 051 30103	10k 5% 0,062W	kara
3611	4822 117 13632	100k 1% 0,62W	kara
3612	2120 366 90291	Potm Rotary 20K	kara
3613	4822 051 30103	10k 5% 0,062W	kara
3614	4822 051 30339	33R 5% 0,062W	kara
3615	4822 051 30331	330R 5% 0,062W	kara
4100	4822 051 30008	0R Jumper 0603	
4101	4822 051 30008	0R Jumper 0603	
4102	4822 051 30008	0R Jumper 0603	
4103	4822 051 30008	0R Jumper 0603	
4104	4822 051 30008	0R Jumper 0603	
4105	4822 051 30008	0R Jumper 0603	
4106	4822 051 30008	0R Jumper 0603	
4107	4822 051 30008	0R Jumper 0603	
4108	4822 051 30008	0R Jumper 0603	
4109	4822 051 30008	0R Jumper 0603	
4111	4822 051 30008	0R Jumper 0603	
4112	4822 051 30008	0R Jumper 0603	
4113	4822 051 30008	0R Jumper 0603	
4114	4822 051 30008	0R Jumper 0603	
4115	4822 051 30008	0R Jumper 0603	
4116	4822 051 30008	0R Jumper 0603	
4117	4822 051 30008	0R Jumper 0603	
4119	4822 051 30008	0R Jumper 0603	
4120	4822 051 30008	0R Jumper 0603	
4121	4822 051 30008	0R Jumper 0603	
4122	4822 051 30008	0R Jumper 0603	
4128	4822 051 30008	0R Jumper 0603	
4130	4822 051 30008	0R Jumper 0603	
4132	4822 051 30008	0R Jumper 0603	

ELECTRICAL PARTS LIST - FRONT BOARDS

RESISTORS

4137	4822 051 30008	0R Jumper 0603
4138	4822 051 30008	0R Jumper 0603
4139	4822 051 30008	0R Jumper 0603
4140	4822 051 30008	0R Jumper 0603
4141	4822 051 30008	0R Jumper 0603
4142	4822 051 30008	0R Jumper 0603
4143	4822 051 30008	0R Jumper 0603
4144	4822 051 30008	0R Jumper 0603
4145	4822 051 30008	0R Jumper 0603
4146	4822 051 30008	0R Jumper 0603
4147	4822 051 30008	0R Jumper 0603
4148	4822 051 30008	0R Jumper 0603
4149	4822 051 30008	0R Jumper 0603
4150	4822 051 30008	0R Jumper 0603
4152	4822 051 30008	0R Jumper 0603
4153	4822 051 30008	0R Jumper 0603
4154	4822 051 30008	0R Jumper 0603
4155	4822 051 30008	0R Jumper 0603
4156	4822 051 30008	0R Jumper 0603
4157	4822 051 30008	0R Jumper 0603
4158	4822 051 30008	0R Jumper 0603
4159	4822 051 30008	0R Jumper 0603
4160	4822 051 30008	0R Jumper 0603
4161	4822 051 30008	0R Jumper 0603
4163	4822 051 30008	0R Jumper 0603
4164	4822 051 30008	0R Jumper 0603
4165	4822 051 30008	0R Jumper 0603
4166	4822 051 30008	0R Jumper 0603
4168	4822 051 30008	0R Jumper 0603
4169	4822 051 30008	0R Jumper 0603
4170	4822 051 30008	0R Jumper 0603
4171	4822 051 30008	0R Jumper 0603
4172	4822 051 30008	0R Jumper 0603
4173	4822 051 30008	0R Jumper 0603
4174	4822 051 30008	0R Jumper 0603
4175	4822 051 30008	0R Jumper 0603
4176	4822 051 30008	0R Jumper 0603
4177	4822 051 30008	0R Jumper 0603
4178	4822 051 30008	0R Jumper 0603
4179	4822 051 30008	0R Jumper 0603
4180	4822 051 30008	0R Jumper 0603
4181	4822 051 30008	0R Jumper 0603
4182	4822 051 30008	0R Jumper 0603
4183	4822 051 30008	0R Jumper 0603
4184	4822 051 30008	0R Jumper 0603
4185	4822 051 30008	0R Jumper 0603
4186	4822 051 30008	0R Jumper 0603
4187	4822 051 30008	0R Jumper 0603
4188	4822 051 30008	0R Jumper 0603
4189	4822 051 30008	0R Jumper 0603
4190	4822 051 30008	0R Jumper 0603
4191	4822 051 30008	0R Jumper 0603
4192	4822 051 30008	0R Jumper 0603
4193	4822 051 30008	0R Jumper 0603
4194	4822 051 30008	0R Jumper 0603
4195	4822 051 30008	0R Jumper 0603
4196	4822 051 30008	0R Jumper 0603
4197	4822 051 30008	0R Jumper 0603
4198	4822 051 30008	0R Jumper 0603
4199	4822 051 30008	0R Jumper 0603
4200	4822 051 30008	0R Jumper 0603
4201	4822 051 30008	0R Jumper 0603
4202	4822 051 30008	0R Jumper 0603
4203	4822 051 30008	0R Jumper 0603
4204	4822 051 30008	0R Jumper 0603
4205	4822 051 30008	0R Jumper 0603
4206	4822 051 30008	0R Jumper 0603
4207	4822 051 30008	0R Jumper 0603
4208	4822 051 30008	0R Jumper 0603
4209	4822 051 30008	0R Jumper 0603
4210	4822 051 30008	0R Jumper 0603
4211	4822 051 30008	0R Jumper 0603
4212	4822 051 30008	0R Jumper 0603
4213	4822 051 30008	0R Jumper 0603
4214	4822 051 30008	0R Jumper 0603
4215	4822 051 30008	0R Jumper 0603
4216	4822 051 30008	0R Jumper 0603
4217	4822 051 30008	0R Jumper 0603
4218	4822 051 30008	0R Jumper 0603
4219	4822 051 30008	0R Jumper 0603
4220	4822 051 30008	0R Jumper 0603
4221	4822 051 30008	0R Jumper 0603
4222	4822 051 30008	0R Jumper 0603
4223	4822 051 30008	0R Jumper 0603
4224	4822 051 30008	0R Jumper 0603
4225	4822 051 30008	0R Jumper 0603
4226	4822 051 30008	0R Jumper 0603
4227	4822 051 30008	0R Jumper 0603
4228	4822 051 30008	0R Jumper 0603
4229	4822 051 30008	0R Jumper 0603
4230	4822 051 30008	0R Jumper 0603
4231	4822 051 30008	0R Jumper 0603
4232	4822 051 30008	0R Jumper 0603
4234	4822 051 30008	0R Jumper 0603
4235	4822 051 30008	0R Jumper 0603
4236	4822 051 30008	0R Jumper 0603
4237	4822 051 30008	0R Jumper 0603
4238	4822 051 30008	0R Jumper 0603
4239	4822 051 30008	0R Jumper 0603
4240	4822 051 30008	0R Jumper 0603
4241	4822 051 30008	0R Jumper 0603
4242	4822 051 30008	0R Jumper 0603
4243	4822 051 30008	0R Jumper 0603
4244	4822 051 30008	0R Jumper 0603

6-17

ELECTRICAL PARTS LIST - FRONT BOARDS

4245	4822 051 30008	0R Jumper 0603
4246	4822 051 30008	0R Jumper 0603
4247	4822 051 30008	0R Jumper 0603
4249	4822 051 30008	0R Jumper 0603
4250	4822 051 30008	0R Jumper 0603
4251	4822 051 30008	0R Jumper 0603
4254	4822 051 30008	0R Jumper 0603
4255	4822 051 30008	0R Jumper 0603
4256	4822 051 30008	0R Jumper 0603
4257	4822 051 30008	0R Jumper 0603
4301	4822 051 30008	0R Jumper 0603
4302	4822 051 30008	0R Jumper 0603
4303	4822 051 30008	0R Jumper 0603
4304	4822 051 30008	0R Jumper 0603
4305	4822 051 30008	0R Jumper 0603
4306	4822 051 30008	0R Jumper 0603
4307	4822 051 30008	0R Jumper 0603
4308	4822 051 30008	0R Jumper 0603
4309	4822 051 30008	0R Jumper 0603
4310	4822 051 30008	0R Jumper 0603
4311	4822 051 30008	0R Jumper 0603
4312	4822 051 30008	0R Jumper 0603
4313	4822 051 30008	0R Jumper 0603
4314	4822 051 30008	0R Jumper 0603
4315	4822 051 30008	0R Jumper 0603
4316	4822 051 30008	0R Jumper 0603
4317	4822 051 30008	0R Jumper 0603
4318	4822 051 30008	0R Jumper 0603
4319	4822 051 30008	0R Jumper 0603
4320	4822 051 30008	0R Jumper 0603
4321	4822 051 30008	0R Jumper 0603
4322	4822 051 30008	0R Jumper 0603
4323	4822 051 30008	0R Jumper 0603
4324	4822 051 30008	0R Jumper 0603
4325	4822 051 30008	0R Jumper 0603
4326	4822 051 30008	0R Jumper 0603
4327	4822 051 30008	0R Jumper 0603
4328	4822 051 30008	0R Jumper 0603
4329	4822 051 30008	0R Jumper 0603
4330	4822 051 30008	0R Jumper 0603
4332	4822 051 30008	0R Jumper 0603
4334	4822 051 30008	0R Jumper 0603
4337	4822 051 30008	0R Jumper 0603
4338	4822 051 30008	0R Jumper 0603
4339	4822 051 30008	0R Jumper 0603
4342	4822 051 30008	0R Jumper 0603
4343	4822 051 30008	0R Jumper 0603
4400	4822 051 30008	0R Jumper 0603
4500	4822 051 30008	0R Jumper 0603
4501	4822 051 30008	0R Jumper 0603
4600	4822 051 30008	0R Jumper 0603
4601	4822 051 30008	0R Jumper 0603
4602	4822 051 30008	0R Jumper 0603

COILS & FILTERS

5100	3198 018 52280	Fixed Inductor 2,2uH 10%	
5101	3139 110 53431	VU Meter FG-PH16CATS00 Black	
5102	5322 242 73686	Ceram Resonator 12MHz	
5103	4822 242 70938	X'tal 32,768kHz	
5104	3198 018 52280	Fixed Inductor 2,2uH 10%	
5105	4822 242 11033	X'tal Resonator 4,332MHz	RDS
5600	2422 549 44607	Fixed Ind 100MHz 600R	
5603	4822 157 10586	Coil 2,2uH 10%	kara
5604	2422 549 44607	Fixed Ind 100MHz 600R	
5605	2422 549 44607	Fixed Ind 100MHz 600R	
5606	2422 549 44607	Fixed Ind 100MHz 600R	

DIODES

6104	9322 190 55676	LTL-816TDK3
6105	4822 130 80622	BAT54
6106	4822 130 31878	1N4003G
6108	4822 130 11397	BAS316
6113	4822 130 31878	1N4003G
6118	4822 130 80622	BAT54
6119	4822 130 31878	1N4003G
6300	9322 190 55676	LTL-816TDK3
6302	9322 190 55676	LTL-816TDK3
6305	9322 190 55676	LTL-816TDK3
6307	9322 190 55676	LTL-816TDK3
6500	9322 179 76676	LTL-816EELC
6501	9322 183 96676	LTL-816GE

TRANSISTORS & INTEGRATED CIRCUITS

7100	3139 110 53501	TMP88CU74F mark "5500S53501"	
7101	5322 130 60159	BC847B	
7102	9352 686 05118	SAA6581T	RDS
7103	9322 145 26668	M24C02-WMN6	
7104	5322 130 60159	BC847B	
7105	5322 130 60159	BC847B	
7106	5322 130 60159	BC847B	
7107	5322 130 60159	BC847B	
7300	4822 209 15449	74HC4094D	
7301	5322 130 60159	BC847B	
7303	5322 130 60159	BC847B	
7306	5322 130 60159	BC847B	
7308	5322 130 60159	BC847B	
7500	5322 130 60159	BC847B	
7501	9322 185 95667	IR RECEIVER TSOP4836	
7504	5322 130 60159	BC847B	
7600	5322 130 60159	BC847B	kara
7601	5322 130 60159	BC847B	kara

Note: Only the parts mentioned in this list are normal service spare parts.

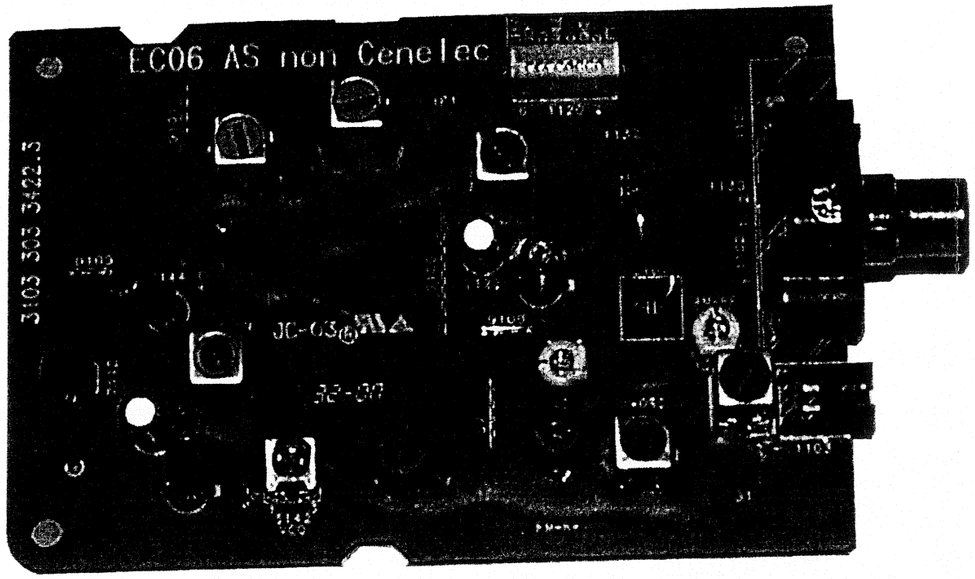

ECO6 Tuner Board

version: ***SYSTEMS non-CENELEC***

TABLE OF CONTENTS

Blockdiagram 7A-1
Schematic Diagram 7A-2
Component Layout 7A-3
Adjustment table 7A-3
Electrical Partslist 7A-4

BLOCK DIAGRAM

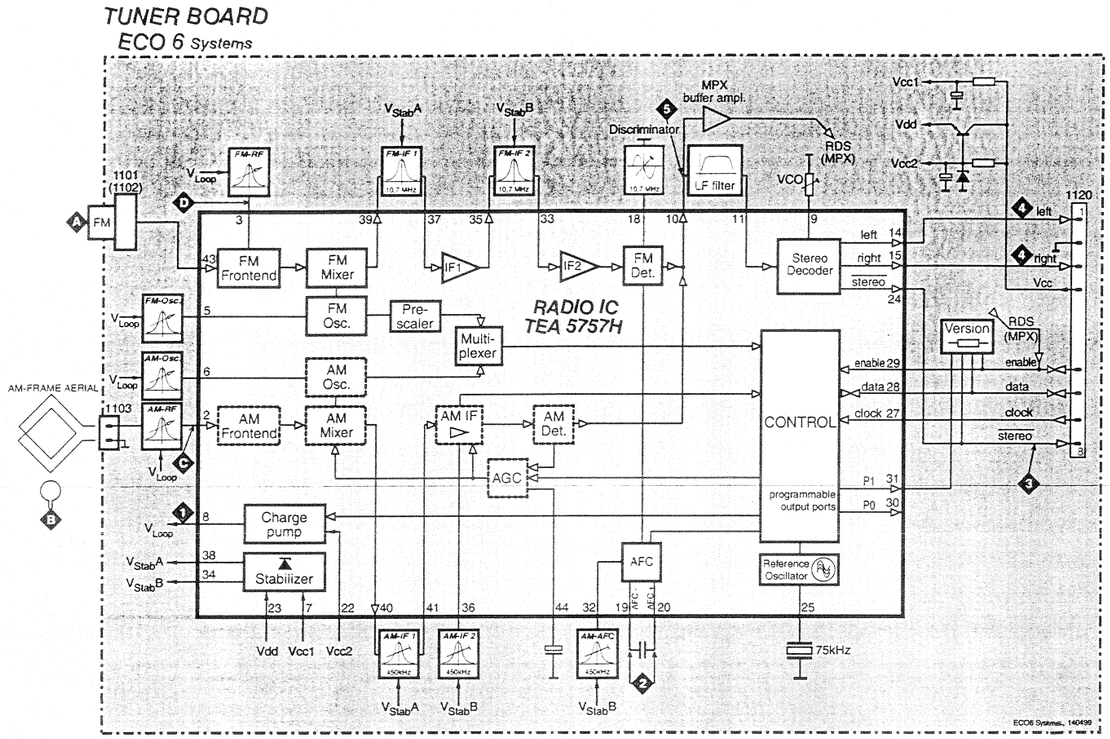

7A-2

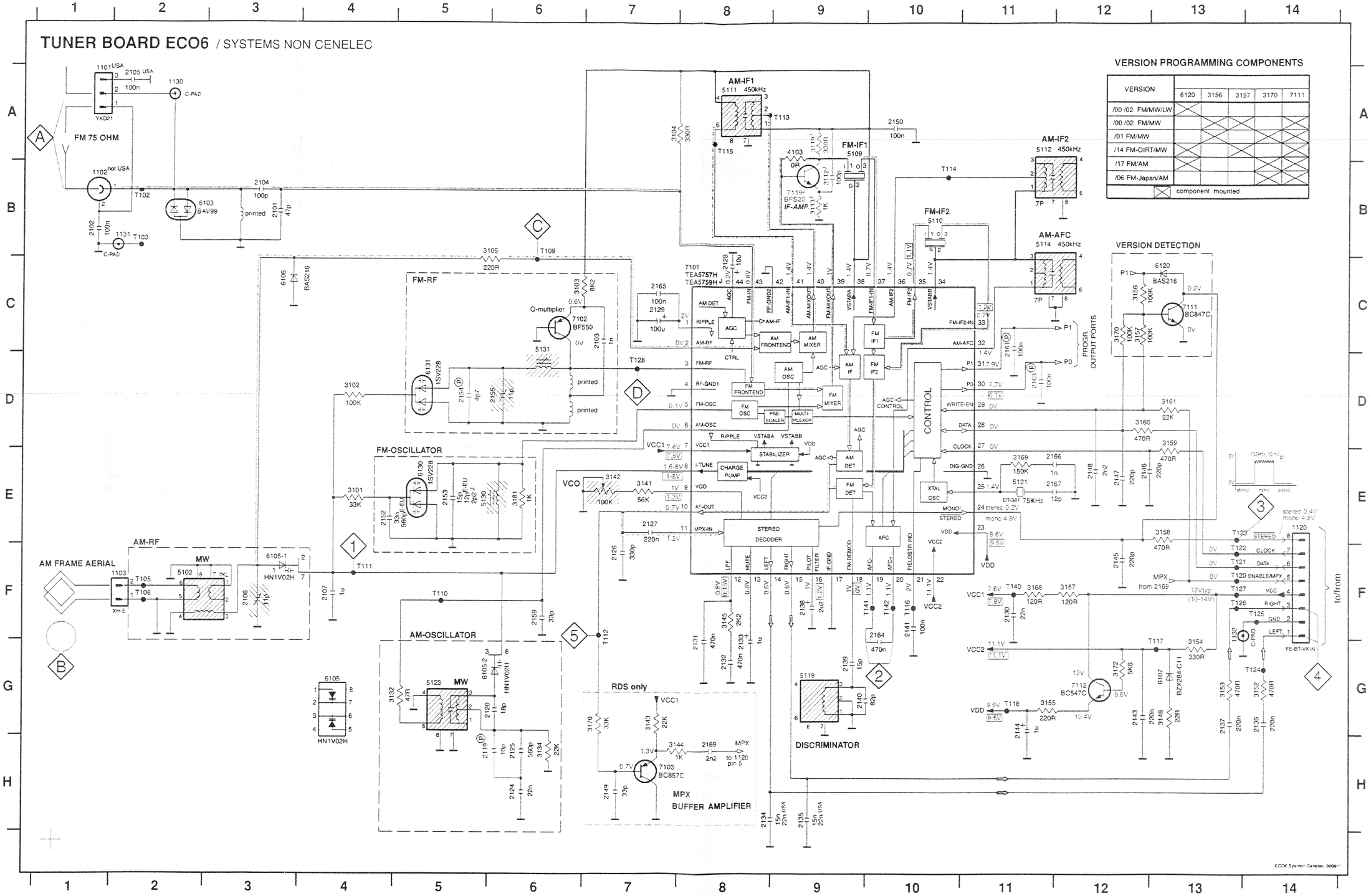

VERSION PROGRAMMING COMPONENTS

VERSION	6120	3156	3157	3170	7111
/00 /02 FM/MW/LW	X				
/00 /02 FM/MW		X	X	X	X
/01 FM/MW		X	X	X	X
/14 FM-OIRT/MW	X		X	X	X
/17 FM/AM	X			X	X
/06 FM-Japan/AM				X	X

X = component mounted

LEGEND

(p)....for provision only
USA ... for USA version only
E-EU ... for East European version only
J ... for Japanese version only

(V) EVM

...V FM mode stereo
...V MW mode
...V LW mode

voltages measured while set is tuned to a strong transmitter

Signal path

FM
AM
MPX (Audio Frequency)
AF - left/right

1101 A6 1120 A4 1132 A5 2128 C4 2138 C2 3142 D2 5110 B3 5114 A2 5123 D5 7112 C1 9104 B5 9107 D4
1102 B6 1130 B5 2106 C5 2129 B4 2144 B2 5102 D6 5111 B4 5119 C2 5130 D3 9101 A2 9105 B1 9108 C4
1103 D6 1131 D5 2107 B5 2133 D2 2155 C4 5109 A3 5112 A3 5121 B2 5131 D4 9103 B2 9106 B3 9109 D2

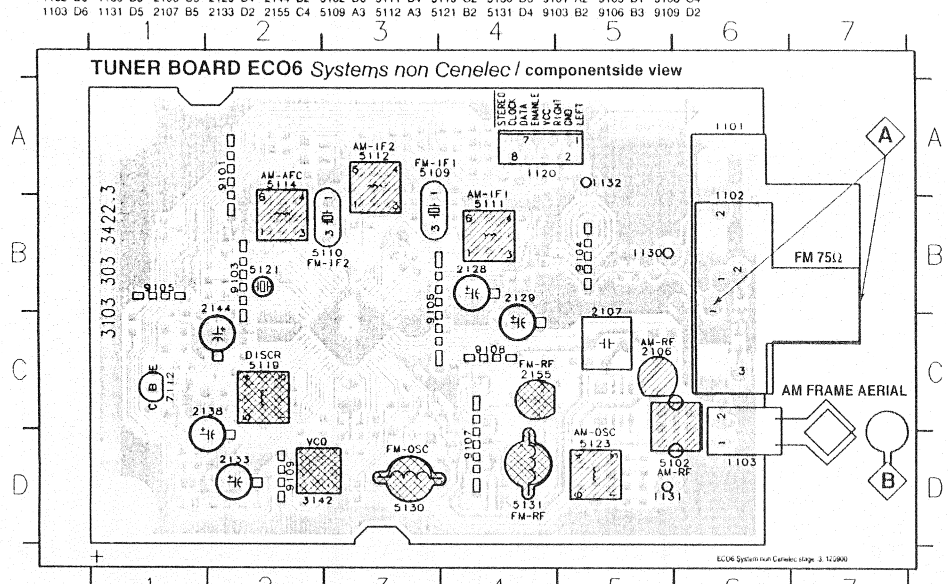

2101 B4 2119 D3 2130 D5 2137 A4 2146 B7 2153 C5 2165 C4 3103 C4 3134 D3 3152 A4 3158 A4 3169 B6 4106 C4 6107 C7 7103 D7
2102 B1 2120 D3 2131 C5 2139 C6 2147 A5 2154 C4 2166 B6 3104 B4 3141 C5 3153 A4 3159 A5 3170 A6 4107 C5 6120 A6 7111 A5
2103 D4 2124 D3 2132 D6 2140 C6 2148 B6 2159 C5 2167 B6 3105 C4 3143 D6 3154 C7 3160 A5 3172 C7 4108 C5 6130 D4 7119 B5
2104 B4 2125 D3 2134 D7 2141 C6 2149 D6 2161 A6 2169 A4 3113 B5 3144 B7 3155 C7 3161 A5 3176 D6 6103 B3 6131 C4
2105 C1 2126 D6 2135 D7 2143 C7 2150 B5 2163 B6 3101 D5 3119 B5 3145 C5 3156 A6 3167 B7 3181 D4 6105 C3 7101 C5
2112 B5 2127 C5 2136 A4 2145 A5 2152 C5 2164 C6 3102 C3 3132 D5 3146 C7 3157 A6 3168 C7 4103 B5 6106 C3 7102 D4

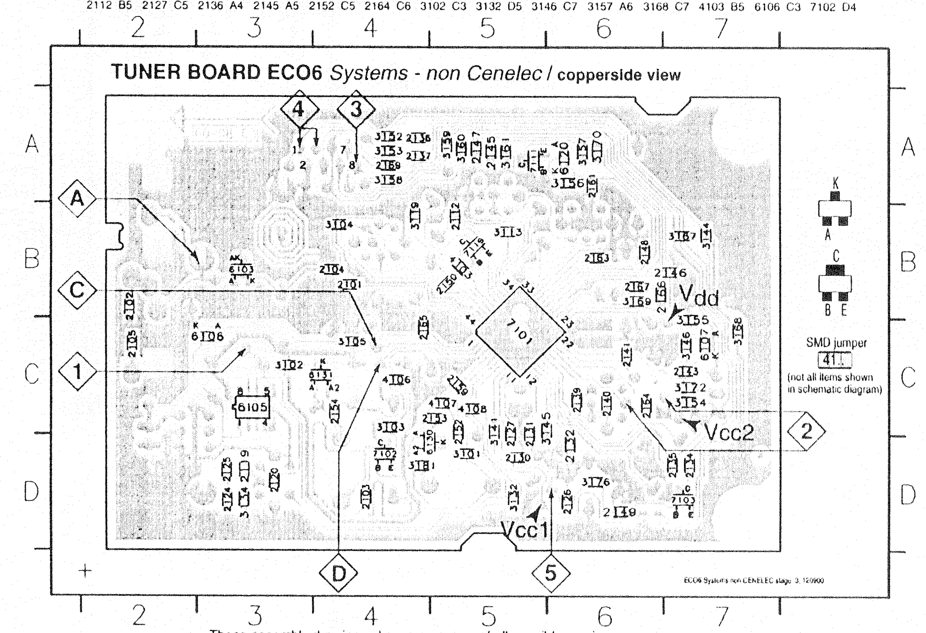

These assembly drawings show a summary of all possible versions.
For components used in a specific version see schematic diagram respectively partslist.

7A-3

TUNER ADJUSTMENT TABLE (ECO6 FM/MW- and FM/MW/LW - versions with AM-frame aerial)

Waverange	Input frequency	Input	Tuned to	Adjust	Output	Scope/Voltmeter
VARICAP ALIGNMENT						
FM 87.5 - 108MHz (65.81 - 74, 87.5 - 108MHz)			108MHz	5130	1	8V ±0.2V
			87.5MHz (65.81MHz)	check		4.3V ±0.5V (1.2V ±0.5V)
MW FM/AM-version, 10kHz grid 530 - 1700kHz			1700kHz	5123		8V ±0.2V
			530kHz	check		1.1V ±0.4V
FM/MW-version, 9kHz grid 531 - 1602kHz			1602kHz	5123		6.9V ±0.2V
			531kHz	check		1.1V ±0.4V
LW 153 - 279kHz			279kHz	5122		8V ±0.2V
			153kHz	check		1.1V ±0.4V
MW FM/MW/LW- version, 9kHz grid 531 - 1602kHz			1602kHz	5123		8V ±0.2V
			531kHz	check		1.1V ±0.4V
FM IF						
FM	10.7MHz, 45mV continuous wave	D	IC 7101 21 shortcircuit to block AFC 2141	5119	2	0 ± 3 mV DC
FM RF						
FM 87.5 - 108MHz (65.81 - 74, 87.5 - 108MHz)	108MHz	A	108MHz	2155	4	MAX
	87.5MHz (65.81MHz)	mod=1kHz Δf=±22.5kHz	87.5MHz (65.81MHz)	5131		
VCO						
FM	98MHz, 1mV continuous wave	A	98MHz	3142	3	152kHz ±1kHz [1]
AM IF						
MW	450kHz connect pin 6 of IC 7101 (AM Osc.) with 3.3kΩ to Vcc	C Δf=±10kHz V_{RF} = 0.5mV (as low as possible)	IC 7101 36 100nF 220R	5111	5	max, f_0 symmetric
			IC 7101 40 100nF 220R see remark 2)	5112		
AM AFC **MW**		C continuous wave V_{RF} = 2mV		5114	2	0 ± 2 mV DC
AM RF [3]						
MW [4] FM/MW/LW- and FM/MW-version (9kHz grid) 531 - 1602kHz	1494kHz	B	1494kHz	2106	5	max, f_0 symmetric
	558kHz		558kHz	5102		
LW	198kHz		198kHz	5103		
MW FM/AM-version, 10kHz grid 530 - 1700kHz	1500kHz	Δf = ±30kHz V_{RF} as low as possible	1500kHz	2106		
	560kHz		560kHz	5102		

Use Service Testprogram. By selecting the TUNER TEST test frequencies will be stored as preset frequencies automatically.

[1] If sensitivity of frequency counter is too low adjust to max. channel separation (input signal: stereo left 90% + 9%, adjust output on right channel to minimum)

[2] RC network serves for damping the IF-filter while adjusting the other one.

[3] For AM RF adjustments the original frame antenna has to be used !

[4] MW has to be aligned before LW.

↕ Repeat

Electrical Partslist ECO6 *SYSTEMS NON-CENELEC*

MISCELLANEOUS

1101	2422 015 19376	SOCKET 2P CLICKFIT	USA only
1102	4822 267 10283	SOCKET COAX, IEC 75Ω	not USA
1103	4822 265 31184	JST CONNECTOR 2 POLE	
1120	4822 265 11515	FFC SOCKET, 8P	

CAPACITORS

2101©	4822 126 13692	47pF	1%	63V	
2102©	4822 126 13838	100nF	10%	50V	not USA
2103©	5322 122 31647	1nF	10%	63V	
2104©	5322 122 32531	100pF	5%	50V	
2105©	4822 126 13838	100nF	10%	50V	USA only
2106	2020 800 00191	3-11pF TRIMCAP.,N450			
2107	4822 121 51319	1µF	20%	50V	
2120©	4822 126 13689	18pF	1%	63V	
2124©	5322 122 32654	22nF	10%	63V	
2125©	2020 552 96199	560pF	1%	50V	
2126©	5322 122 31863	330pF	5%	50V	
2127©	4822 126 14076	220nF	20%	25V	
2128	4822 124 40248	10µF	20%	63V	
2129	4822 124 41584	100µF	20%	10V	
2130©	5322 122 32654	22nF	10%	63V	
2131©	4822 126 13482	470nF	20%	16V	
2132©	4822 126 13482	470nF	20%	16V	
2133	4822 124 21913	1µF	20%	63V	
2134©	4822 126 13188	15nF	5%	63V	not USA
2134©	5322 122 32654	22nF	10%	63V	USA only
2135©	4822 126 13188	15nF	5%	63V	not USA
2135©	5322 122 32654	22nF	10%	63V	USA only
2136©	4822 126 14076	220nF	20%	25V	
2137©	4822 126 14076	220nF	20%	25V	
2138	4822 124 22652	2,2µF	20%	50V	
2139©	4822 126 14236	15pF	5%	50V	
2140©	4822 126 13695	82pF	1%	63V	
2141©	4822 126 13838	100nF	10%	50V	
2143©	4822 126 14076	220nF	20%	25V	
2144	4822 124 21913	1µF	20%	63V	
2145©	4822 122 33575	220pF	5%	50V	
2146©	4822 122 33575	220pF	5%	50V	
2147©	4822 122 33575	220pF	5%	50V	
2148©	4822 122 33127	2,2nF	10%	63V	
2149©	5322 122 32659	33pF	5%	50V	RDS only
2150©	4822 126 13838	100nF	10%	50V	
2152©	4822 126 12105	33nF	5%	63V	not for East Europe
2152©	5322 116 80853	560pF	5%	63V	for East Europe only
2153©	4822 126 13486	15pF	2%	63V	not for East Europe
2153©	4822 122 33926	12pF	2%	50V	for East Europe only
2155	2020 800 00191	3-11pF TRIMCAP.,N450			
2159©	5322 122 32659	33pF	5%	50V	
2164©	4822 126 13482	470nF	20%	16V	
2165©	4822 126 13838	100nF	10%	50V	
2166©	5322 122 31647	1nF	10%	63V	
2167©	4822 122 33926	12pF	5%	50V	
2169©	4822 122 33127	2,2nF	10%	63V	RDS only

RESISTORS

3101©	4822 051 20333	33kΩ	5%	0,1W	
3102©	4822 117 10837	100kΩ	1%	0,1W	
3103©	4822 051 20822	8,2kΩ	5%	0,1W	
3104©	4822 117 13577	330Ω	1%	0,1W	
3105©	4822 117 11503	220Ω	5%	0,1W	
3132©	4822 051 20479	47Ω	5%	0,1W	
3134©	4822 051 20223	22kΩ	5%	0,1W	
3141©	4822 117 11148	56kΩ	1%	0,1W	
3142	4822 100 12159	TRIMPOT. 100kΩ			
3143©	4822 051 20223	22kΩ	5%	0,1W	RDS only
3144©	4822 051 10102	1kΩ	2%	0,25W	RDS only
3145©	4822 117 11449	2,2kΩ	1%	0,1W	
3146©	4822 051 20229	22Ω	5%	0,1W	
3152©	4822 051 20471	470Ω	5%	0,1W	
3153©	4822 051 20471	470Ω	5%	0,1W	
3154©	4822 117 13577	330Ω	1%	0,1W	
3155©	4822 117 11503	220Ω	5%	0,1W	
3156©	4822 117 10837	100kΩ	1%	0,1W	
3157©	4822 117 10837	100kΩ	1%	0,1W	
3158©	4822 051 20471	470Ω	5%	0,1W	
3159©	4822 051 20471	470Ω	5%	0,1W	
3160©	4822 051 20471	470Ω	5%	0,1W	
3161©	4822 051 20223	22kΩ	5%	0,1W	
3167©	4822 051 20121	120Ω	5%	0,1W	
3168©	4822 051 20121	120Ω	5%	0,1W	
3169©	4822 051 20154	150kΩ	5%	0,1W	
3170©	4822 117 10837	100kΩ	1%	0,1W	
3172©	4822 051 20562	5,6kΩ	5%	0,1W	
3176©	4822 051 20333	33kΩ	5%	0,1W	RDS only
3181©	4822 051 10102	1kΩ	2%	0,25W	
4103©	4822 051 20008	CHIP JUMPER 0805			
4106©	4822 051 20008	CHIP JUMPER 0805			
4107©	4822 051 20008	CHIP JUMPER 0805			
4108©	4822 051 20008	CHIP JUMPER 0805			

COILS

5102	4822 157 71634	RF-COIL MW
5109	4822 242 70665	FM-IF FILTER 10,7MHz
5110	4822 242 70665	FM-IF FILTER 10,7MHz
5111	2422 549 44023	AM-IF FILTER 450kHz
5112	4822 157 70302	AM-IF FILTER 450kHz
5114	4822 157 70302	AM-IF FILTER 450kHz
5119	4822 157 11443	DISCRIMINATOR COIL
5121	4822 242 10261	QUARTZ 75kHz
5123	2422 549 44108	RF-COIL, AM-OSCILLATOR
5130	4822 157 11843	RF COIL 1,5 TURNS
5131	4822 157 11843	RF COIL 1,5 TURNS

DIODES

6103©	5322 130 34337	BAV99
6105©	4822 130 83075	HN1V02H
6106©	4822 130 83757	BAS216
6107©	9340 386 90115	BZX284-C11
6120©	4822 130 83757	BAS216
6130©	4822 130 82833	1SV228
6131©	4822 130 82833	1SV228

TRANSISTORS

7102	4822 130 42131	BF550	
7103©	5322 130 42756	BC857C	RDS only
7111©	5322 130 42755	BC847C	
7112	4822 130 44503	BC547C	

INTEGRATED CIRCUITS

7101©	9351 740 80557	TEA5757H/V1, RADIO IC

7A-4

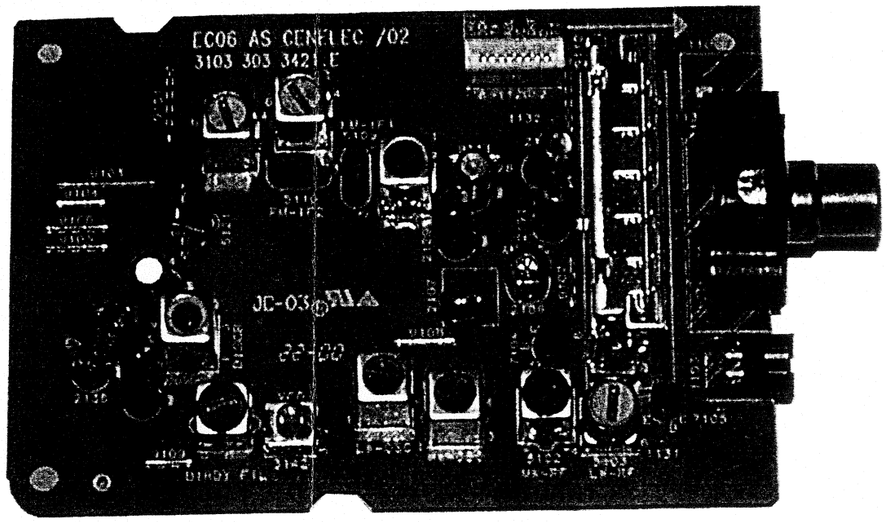

ECO6 Tuner Board

version: ***SYSTEMS CENELEC***

TABLE OF CONTENTS

Blockdiagram 7B-1
Schematic Diagram 7B-2
Component Layout 7B-3
Adjustment table 7B-3
Electrical Partslist 7B-4

BLOCK DIAGRAM

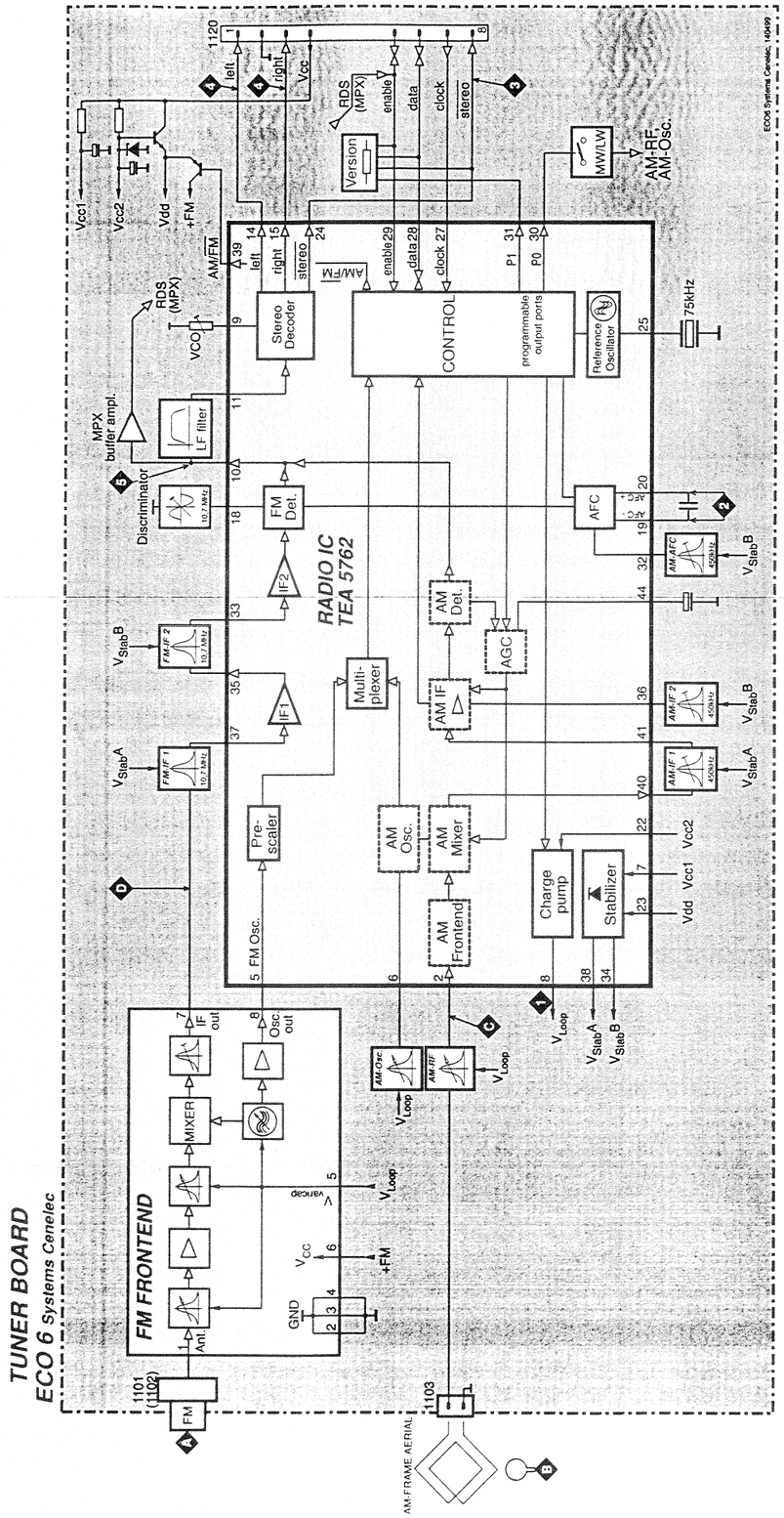

7B-2

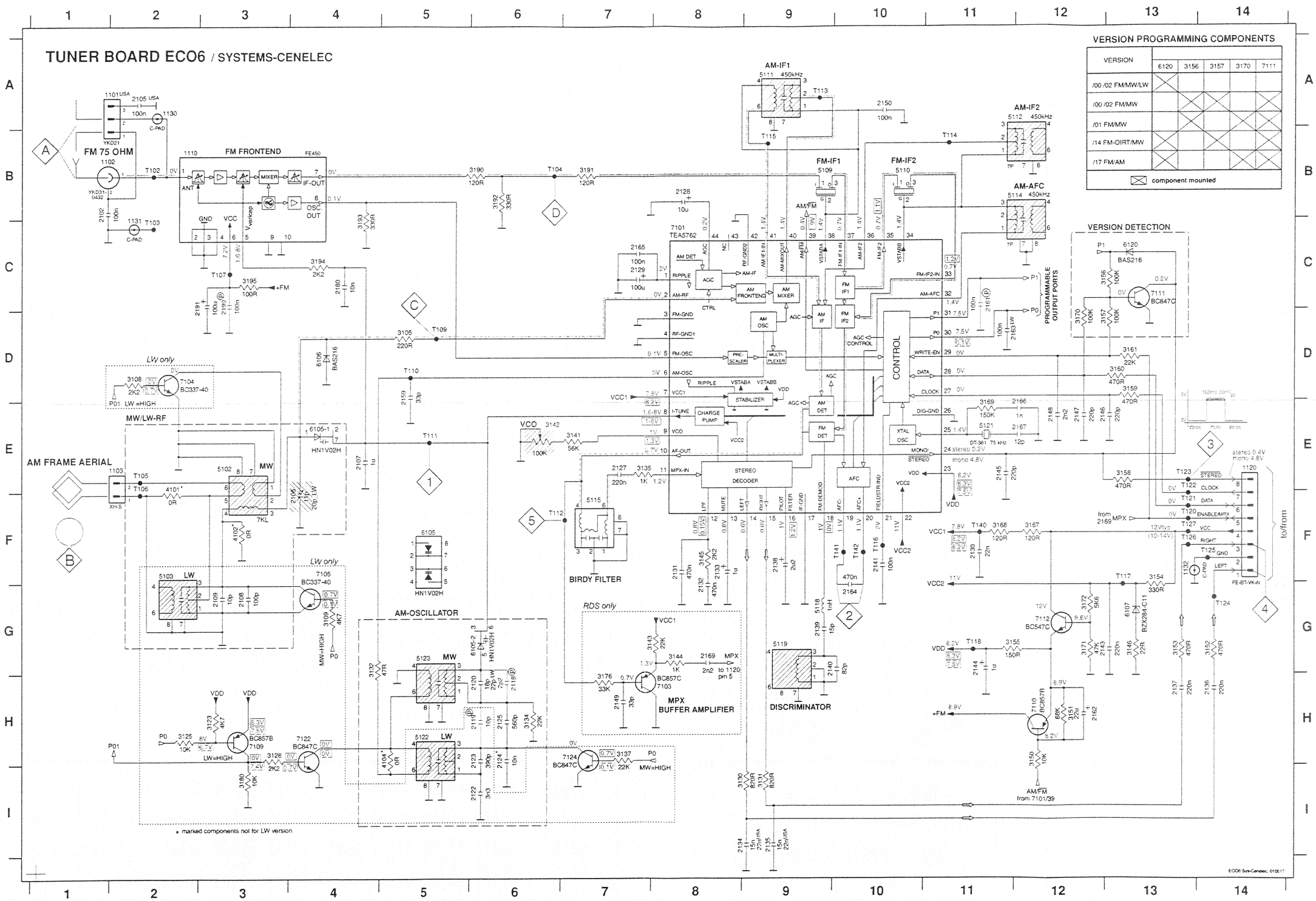

VERSION PROGRAMMING COMPONENTS

VERSION	6120	3156	3157	3170	7111
/00 /02 FM/MW/LW	X				
/00 /02 FM/MW		X	X		X
/01 FM/MW		X		X	X
/14 FM-OIRT/MW	X		X		X
/17 FM/AM	X			X	X

X component mounted

LEGEND

* ... only assembled in FM/AM-version
(p) ... for provision only
USA ... for USA version only
LW ... for LW version only

SMD jumper
41xx
0R

EVM

...V FM mode stereo
...V MW mode
...V LW mode
voltages measured while set is tuned to a strong transmitter

Signal path
FM
AM
MPX (Audio Frequency)
AF - left/right

1101 B5 1110 B4 1131 C5 2107 B3 2133 C1 2162 A4 5102 C4 5110 A2 5114 A2 5121 B2 7104 C4 9101 A2 9104 B1 9107 B4 9110 A4
1102 B5 1120 A4 1132 A4 2128 A3 2138 B1 2191 B4 5103 C4 5111 A3 5115 C2 5122 C3 7105 C5 9102 B2 9105 B1 9108 B3 9111 A3
1103 C5 1130 A5 2106 B4 2129 B3 2144 B1 3142 C2 5109 B3 5112 A2 5119 B2 5123 C3 7112 B1 9103 A1 9106 B1 9109 C2

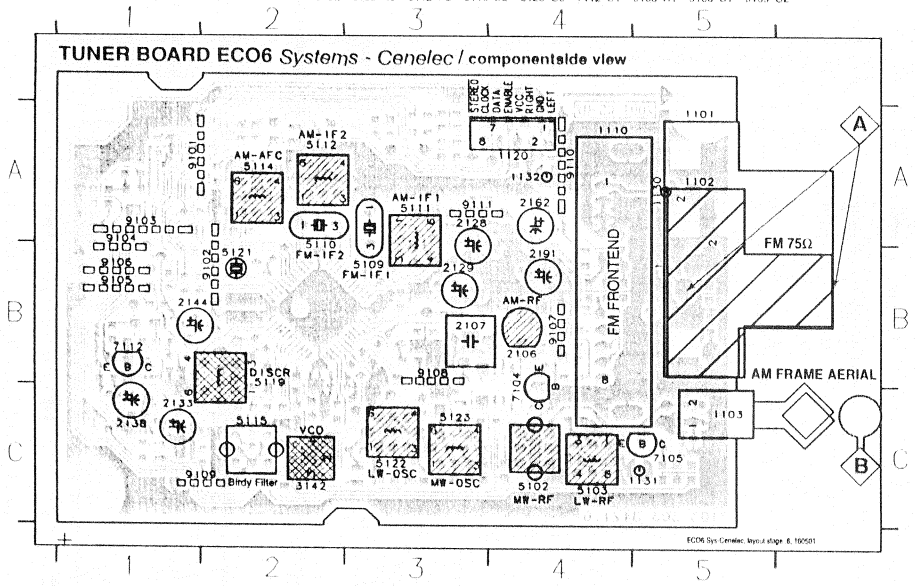

2102 B1 2120 C3 2130 B3 2137 A3 2146 B5 2161 A4 2169 A3 3123 A5 3134 C3 3145 C4 3154 B5 3160 A3 3171 B5 3192 A2 4104 C3 6106 B2 7110 B2
2105 B1 2122 C3 2131 C4 2139 B4 2147 A5 2163 A4 2180 B2 3125 A5 3135 C4 3146 B5 3155 B5 3161 A4 3172 B5 3193 B2 4105 B2 6107 B5 7111 A4
2108 C1 2123 C3 2132 C4 2140 B4 2148 B4 2164 B4 2190 B2 3128 C2 3137 C4 3150 B3 3156 A4 3167 A5 3176 C4 3194 B2 4106 B3 6120 A4 7122 C3
2109 C1 2124 C3 2134 C5 2141 B5 2149 C4 2165 B3 3105 B3 3130 C4 3141 B3 3151 A2 3157 A4 3168 C5 3180 A5 3195 B2 4107 C4 7101 B4 7124 C3
2118 C3 2125 C3 2135 C5 2143 B5 2150 B3 2166 B5 3108 C2 3131 C4 3143 C5 3152 A3 3158 A3 3169 B4 3190 B2 4101 C2 5118 C4 7103 C5
2119 C3 2127 C4 2136 A3 2145 B5 2159 B3 2167 B4 3109 C1 3132 B3 3144 A5 3153 A3 3159 A3 3170 A4 3191 A3 4102 C2 6105 B2 7109 A5

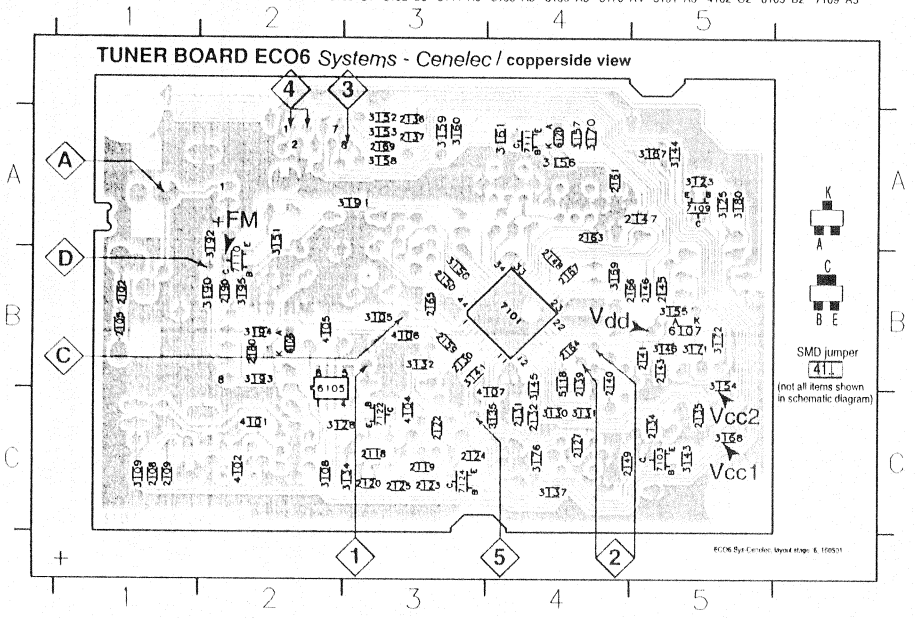

These assembly drawings show a summary of all possible versions.
For components used in a specific version see schematic diagram respectively partslist.

TUNER ADJUSTMENT TABLE (ECO6 Cenelec FM/MW - and FM/MW/LW - versions with AM-frame aerial)

Waverange	Input frequency	Input	Tuned to	Adjust	Output	Scope/Voltmeter
VARICAP ALIGNMENT						
FM 87.5 - 108MHz (50kHz grid)			108MHz	check	1	8V ±1.2V
			87.5MHz	check		1.6V ±0.5V
MW 531 - 1602kHz (9kHz grid)			1602kHz	5123		8V ±0.2V 3-band 6.9V ±0.2V 2-band
			531kHz	check		1.1V ±0.4V
LW 153 - 279kHz (3kHz grid)			279kHz	5122		8V ±0.2V
			153kHz	check		1.1V ±0.4V
FM - IF						
FM	10.7MHz, 45mV continuous wave	D	IC 7101 21 shortcircuit to block AFC 2141	5119	2	0mV ±3mV
FM - VCO						
FM	98MHz, 1mV continuous wave	A	98MHz	3142	3	152kHz ±1kHz 1)
FM RF (channel separation)	Note: The FM-frontend unit has already been adjusted by the factory and needs therefore no further adjustments for service purposes.					
FM	98MHz, 1mV 90% Left + 9% pilot mod=1kHz	A	98MHz	IF coil inside FM frontend 1110	4	right channel min.
AM IF						
MW	450kHz connect pin 6 of IC 7101 (AM Osc.) with 3.3kΩ to Vcc	C Δf = ±10kHz V_{RF} = 0.5mV (as low as possible)	IC 7101 36 100nF 220R	5111	5	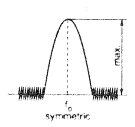
			IC 7101 40 100nF 220R see remark 2)	5112		
AM AFC MW		C continuous wave V_{RF} = 2mV		5114	2	0mV ±2mV
AM RF 3)						
MW	1494kHz	B Δf = ±30kHz V_{RF} as low as possible	1494kHz	2106	5	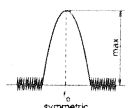
	558kHz		558kHz	5102		
LW	198kHz		198kHz	5103		

Use Service Testprogram. By selecting the TUNER TEST test frequencies will be stored as preset frequencies automatically.

1) If sensitivity of frequency counter is too low adjust to max. channel separation (input signal: stereo left 90% + 9%, adjust output on right channel to minimum)

2) RC network serves for damping the IF-filter while adjusting the other one.

3) For AM RF adjustments the original frame antenna has to be used! MW has to be aligned before LW.

Repeat

Electrical Partslist *ECO6* SYSTEMS-CENELEC

MISCELLANEOUS

1101	2422 015 19376	SOCKET CLICKFIT 2P	USA only
1102	4822 267 10283	SOCKET COAX, IEC 75Ω	not USA
1103	4822 265 31184	JST CONNECTOR, 2 POLE	
1110	2422 542 90071	FM FRONTEND	
1120	4822 265 11515	FFC SOCKET, 8P	

CAPACITORS

2102©	4822 126 13838	100nF	10%	50V	not USA
2105©	4822 126 13838	100nF	10%	50V	USA only
2106	2020 800 00204	TRIMCAP, 4,2 - 20pF, N750			LW only
2106	2020 800 00191	TRIMCAP, 3 - 11pF, N450			FM/AM only
2107	4822 121 51319	1μF	20%	50V	
2108©	5322 122 32531	100pF	5%	50V	LW only
2109©	5322 122 32448	10pF	5%	50V	LW only
2120©	4822 126 13689	18pF	1%	63V	FM/AM only
2120©	5322 122 32658	22pF	5%	50V	LW only
2122©	4822 122 33891	3,3nF	10%	63V	LW only
2123©	2020 552 93494	390pF	1%	50V	LW only
2124©	4822 122 33177	10nF	20%	50V	FM/AM only
2125©	2020 552 96199	560pF	1%	50V	
2127©	4822 126 14076	220nF	20%	25V	
2128	4822 124 40248	10μF	20%	63V	
2129	4822 124 41584	100μF	20%	10V	
2130©	5322 122 32654	22nF	10%	63V	
2131©	4822 126 13482	470nF	20%	16V	
2132©	4822 126 13482	470nF	20%	16V	
2133	4822 124 21913	1μF	20%	63V	
2134©	3198 017 31530	15nF	10%	50V	not USA
2134©	5322 122 32654	22nF	10%	63V	USA only
2135©	3198 017 31530	15nF	10%	50V	not USA
2135©	3198 017 32230	22nF	10%	25V	USA only
2136©	4822 126 14076	220nF	20%	25V	
2137©	4822 126 14076	220nF	20%	25V	
2138	4822 124 22652	2,2μF	20%	50V	
2139©	4822 126 14236	15pF	5%	50V	
2140©	4822 126 13695	82pF	1%	63V	
2141©	4822 126 13838	100nF	10%	50V	
2143©	4822 126 14076	220nF	20%	25V	
2144	4822 124 21913	1μF	20%	63V	
2145©	4822 122 33575	220pF	5%	50V	
2146©	4822 122 33575	220pF	5%	50V	
2147©	4822 122 33575	220pF	5%	50V	
2148©	4822 122 33127	2,2nF	10%	63V	
2149©	5322 122 32659	33pF	5%	50V	RDS only
2150©	4822 126 13838	100nF	10%	50V	
2159©	5322 122 31151	22μF	20%	50V	
2163©	4822 126 13838	100nF	10%	50V	LW only
2164©	4822 126 13482	470nF	20%	16V	
2165©	4822 126 13838	100nF	10%	50V	
2166©	5322 122 31647	1nF	10%	63V	
2167©	4822 122 33926	12pF	5%	50V	
2169©	4822 122 33127	2,2nF	10%	63V	RDS only
2180©	3198 017 31030	10nF	10%	50V	
2190©	4822 126 13838	100nF	10%	50V	
2191	4822 124 40178	100μF	20%	10V	

RESISTORS

3105©	4822 117 11503	220Ω	5%	0,1W	
3108©	4822 117 11449	2,2kΩ	1%	0,1W	LW only
3109©	4822 051 20472	4,7kΩ	5%	0,1W	LW only
3123©	4822 051 20472	4,7kΩ	5%	0,1W	LW only
3125©	4822 117 10833	10kΩ	1%	0,1W	LW only

RESISTORS

3128©	4822 117 11449	2,2kΩ	1%	0,1W	LW only
3130©	3198 021 38210	820Ω	5%	0,06W	
3131©	3198 021 38210	820Ω	5%	0,06W	
3132©	4822 051 20479	47Ω	5%	0,1W	
3134©	4822 051 20223	22kΩ	5%	0,1W	
3135©	3198 021 31020	1kΩ	5%	0,06W	
3137©	4822 051 20223	22kΩ	5%	0,1W	LW only
3141©	4822 117 11148	56kΩ	1%	0,1W	
3142	4822 100 12159	TRIMPOT, 100kΩ			
3143©	4822 051 20223	22kΩ	5%	0,1W	RDS only
3144©	4822 051 10102	1kΩ	2%	0,25W	RDS only
3145©	4822 117 11449	2,2kΩ	1%	0,1W	
3146©	4822 051 20229	22Ω	5%	0,1W	
3150©	4822 117 10833	10kΩ	1%	0,1W	
3151©	4822 051 20683	68kΩ	5%	0,1W	
3152©	4822 051 20471	470Ω	5%	0,1W	
3153©	4822 051 20471	470Ω	5%	0,1W	
3154©	4822 117 13577	330Ω	1%	0,1W	
3155©	4822 117 10353	150Ω	5%	0,1W	
3156©	4822 117 10837	100kΩ	1%	0,1W	
3157©	4822 117 10837	100kΩ	1%	0,1W	
3158©	4822 051 20471	470Ω	5%	0,1W	
3159©	4822 051 20471	470Ω	5%	0,1W	
3160©	4822 051 20471	470Ω	5%	0,1W	
3161©	4822 051 20223	22kΩ	5%	0,1W	
3167©	4822 051 20121	120Ω	5%	0,1W	
3168©	4822 051 20121	120Ω	5%	0,1W	
3169©	4822 051 20154	150kΩ	5%	0,1W	
3170©	4822 117 10837	100kΩ	1%	0,1W	
3171©	4822 117 10834	47kΩ	1%	0,1W	
3172©	4822 051 20562	5,6kΩ	5%	0,1W	
3176©	4822 051 20333	33kΩ	5%	0,1W	RDS only
3180©	4822 117 10833	10kΩ	1%	0,1W	LW only
3190©	4822 051 20121	120Ω	5%	0,1W	
3191©	4822 051 20121	120Ω	5%	0,1W	
3192©	4822 117 13577	330Ω	1%	0,1W	
3193©	4822 117 13577	330Ω	1%	0,1W	
3194©	4822 117 11449	2,2kΩ	1%	0,1W	
3195©	4822 051 20101	100Ω	5%	0,1W	
4101©	4822 051 20008	CHIP JUMPER 0805			FM/AM only
4102©	4822 051 20008	CHIP JUMPER 0805			FM/AM only
4104©	4822 051 20008	CHIP JUMPER 0805			FM/AM only
4105©	4822 051 20008	CHIP JUMPER 0805			
4106©	4822 051 20008	CHIP JUMPER 0805			
4107©	4822 051 20008	CHIP JUMPER 0805			

COILS

5102	4822 157 71634	RF-COIL MW	
5103	2422 549 44107	RF-COIL LW	LW only
5109	4822 157 71639	FM-IF FILTER 10,7MHz	
5110	4822 242 70665	FM-IF FILTER 10,7MHz	
5111	2422 549 44023	AM-IF FILTER 450kHz	
5112	4822 157 70302	AM-IF FILTER 450kHz	
5114	4822 157 70302	AM-IF FILTER 450kHz	
5115	4822 157 71636	ANTI BIRDY FILTER	
5118©	2422 535 95881	100nH	
5119	4822 157 11443	DISCRIMINATOR COIL	
5121	4822 242 10261	QUARTZ 75kHz	
5122	2422 549 44108	RF-COIL, LW-OSCILLATOR	LW only
5123	2422 549 44108	RF-COIL, MW-OSCILLATOR	

DIODES

6105©	4822 130 83075	HN1V02H
6106©	4822 130 83757	BAS216
6107©	9340 386 90115	BZX284-C11
6120©	4822 130 83757	BAS216

TRANSISTORS

7103©	5322 130 42756	BC857C	RDS only
7104	9322 003 64676	TBC337-40	LW only
7105	9322 003 64676	TBC337-40	LW only
7109©	4822 130 60373	BC856B	LW only
7110©	4822 130 60373	BC856B	
7111©	5322 130 42755	BC847C	
7112	4822 130 44503	BC547C	
7122©	5322 130 42755	BC847C	LW only
7124©	5322 130 42755	BC847C	LW only

INTEGRATED CIRCUITS

7101	4822 209 90315	TEA5762H/V1, RADIO IC

POWER MODULE PWR207

(75W 6-Channel / 75W Twin Subwoofer)
(100W 6-Channel / 100W Twin Subwoofer)

TABLE OF CONTENTS

Class-D Amplifier circuit description 8-1
Exploded view + mechanical parts 8-2
SW-out (SPK II) Board - Circuit & layout diagrams (Twin Subwoofer versions only) 8-3
Speaker (SPK I) Board - Circuit diagram 8-4
Speaker (SPK I) Board - Componet & Chip layouts 8-5
Mains & ECO Stby Board - Circuit diagram 8-6
Mains & ECO Stby Board - Component & Chip layouts 8-7
Mains & ECO Stby Board - Chip layouts Part A 8-8
Mains & ECO Stby Board - Chip layouts Part B 8-9
Supply Board - Circuit diagram 8-10
Supply Board - Component & Chip layouts 8-11
Supply Board - Chip layout Part A 8-12
Supply Board - Chip layout Part B 8-13
Amplifier Board - Clock Generator & connector - circuit 8-14
Amplifier Board - Amplifier circuit 8-15
Amplifier Board - Bottom view 8-16
Amplifier Board - Top view 8-17
Amplifier Board - Bottom view Part A 8-18
Amplifier Board - Bottom view Part B 8-19
Amplifier Board - Top view Part C 8-20
Amplifier Board - Top view Part D 8-21
Electrical parts list - Mains, Supply, Speaker & SW-out 8-22
Electrical parts list - Amplifier board 8-23

6-channel class-D amplifier

Basic operation of a class-D amplifier

Basically, the output stage of a class-D amplifier outputs a continuous square wave swinging between positive and negative power supplies with a fixed frequency ("clock" frequency) far beyond the audible range. The duty cycle of this square wave is modulated with the audio signal. The output is followed by a low-pass filter which eliminates the clock frequency and allows only the audio signal going to the speaker. See simplified drawing below.

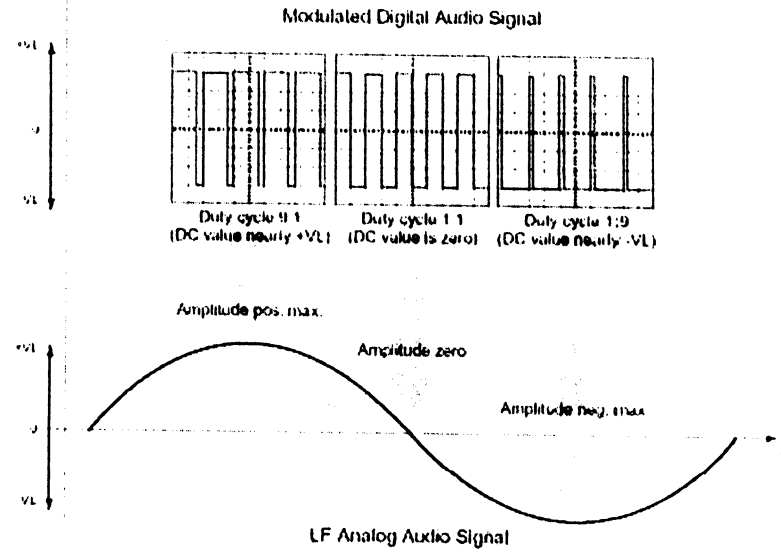

Compared to a conventional power amplifier the benefits of the Class-D amplifier are:

- higher effiency
- lower power dissipation
- smaller heatsink required
- smaller mains transformer required

The main disadvantage of this concept is:

- The amplifier is operating with a high-frequency square wave at high amplitude and currents. This requires special precautions to prevent excessive electromagnetic ratiation (EMC).

Block diagram and operation

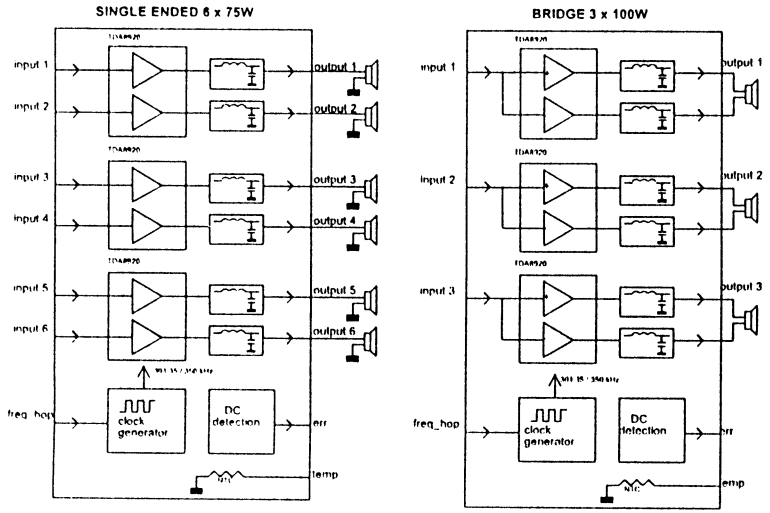

· clock oscillator

The clock frequency is generated around IC7600. Using 2 extra transistors (7602 and 7608) and 2 ceramic resonators it can be operated at 2 frequencies: 602.7kHz and 700kHz. The frequency is selected by the signal "FREQ_HOP" coming from connector 1301 pin 9.
When FREQ_HOP is low, the output of 7600-1 will be high. This switches transistor 7602 on, and connects resonator 1600 (602.7kHz) to inverter 7600-3. Similarly, when FREQ_HOP is high, resonator 1601 is connected to 7600-3.
The output frequency is divided by two by IC7607, resulting in 301.35kHz or 350kHz.
The purpose of a selectable clock frequency is related to the disturbance of the tuner which is built-in together with this amplifier. In MW, the software of the set microprocessor will select the other clock frequency in case the amplifier clock interferes with the tuned station.

· Class-D amplifier TDA8920 and low-pass filter

The TDA8920 is a two channel audio power amplifier using class-D technology. The audio input signal is converted into a digital Pulse Width Modulated (PWM) signal via an analog input stage and PWM modulator. It is then fed to the power stage which outputs a high power PWM signal which switches between the main supply lines.
The TDA8920 is followed by a 2nd-order low-pass filter. It has a cut-off frequency around 50kHz and converts the PWM signal into analog audio signal across the loudspeaker.
The TDA8920 has a temperature protection and a current limiter built-in.
Furthermore, the IC can be put in active, mute and standby mode.
- Active mode (amplifier fully operational) with output signal.
- Mute mode; the amplifiers are operational, but the audio is muted
- Standby mode; with a very low supply current, the output stage is switched off.

· DC-detection

The DC-detection circuit monitors all 6 outputs for DC. Whenever one or more outputs contain DC for more than 1 second, the circuit will be activated. A positive voltage will activate transistor 7710 and pin 10 of connector 1301 will be pulled down. In case of a negative voltage, transistor 7716 will be activated, which in turn activates 7710. The set microprocessor will take further action.

MECHANICAL EXPLODED VIEW

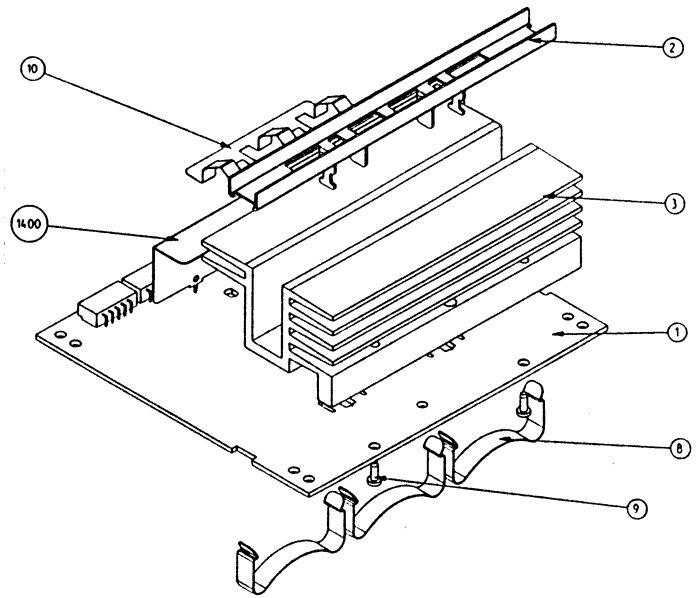

3104 217 07180 bl110

MECHANICAL PARTS LIST & SCREWS

8	4822 492 11735	SPRING, TRANSISTOR
9	-	D2.3 x 8
10	3104 211 29881	EARTH SPRING

Note: Only the parts mentioned in this list are normal service spare parts.

SW-OUT (SPK II) BOARD - CIRCUIT & LAYOUT DIAGRAMS (For Twin Subwoofer versions only)

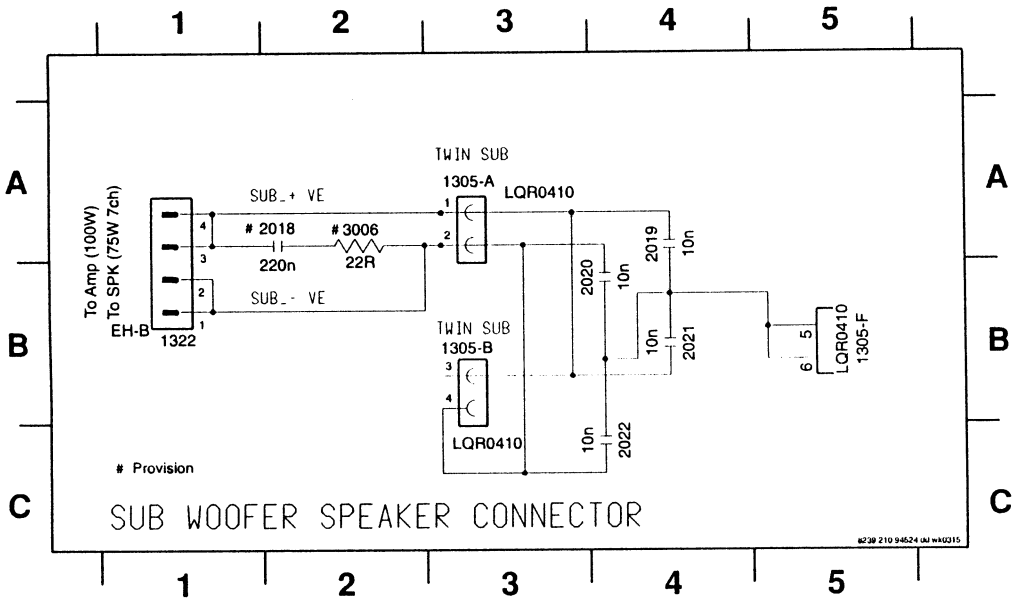

1305-A A3
1305-B B3
1305-F B5
1322 B1
2018 A2
2019 A4
2020 B4
2021 B4
2022 C4
3006 A2

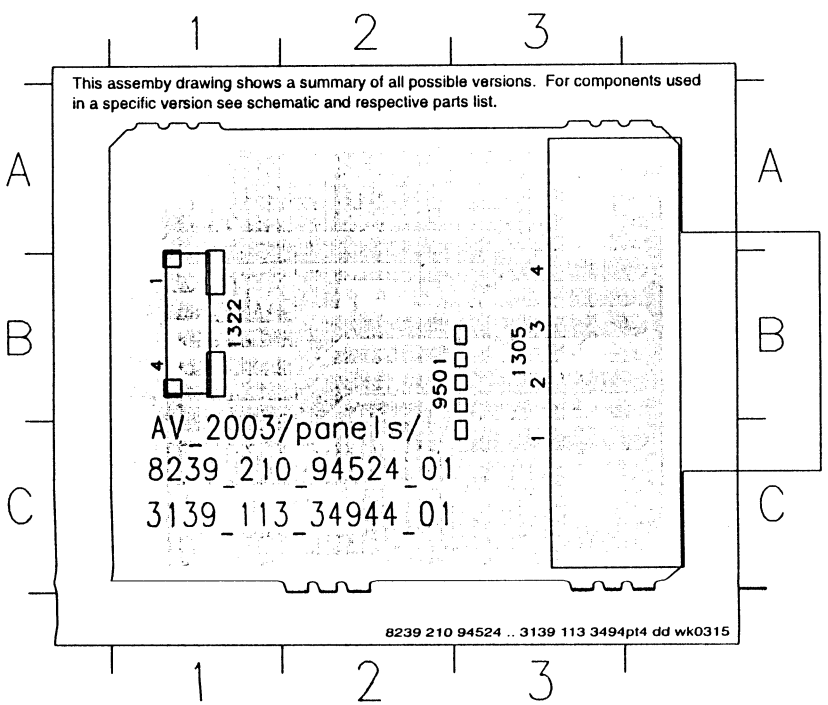

1305 B3
1322 B1
9501 B2

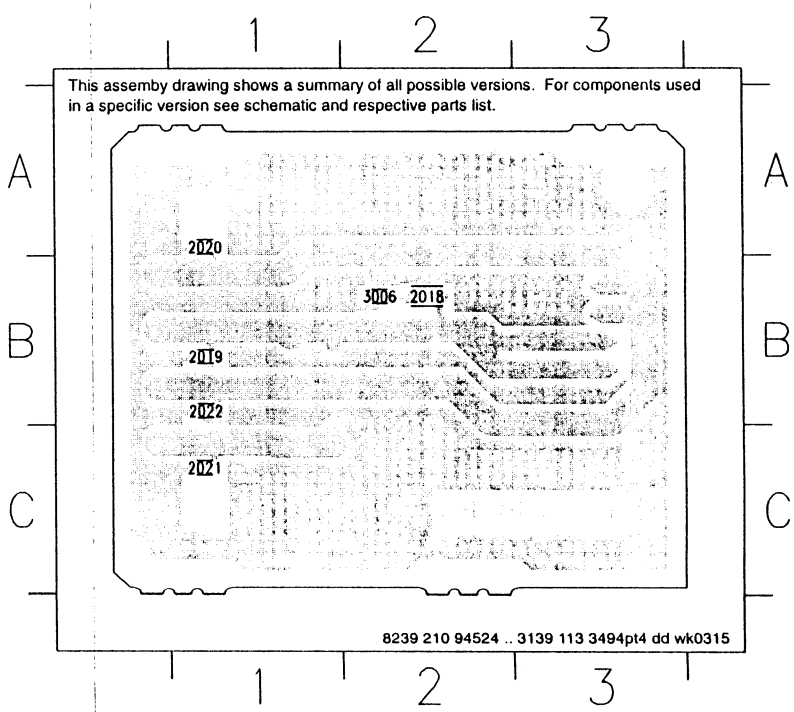

2018 B2
2019 B1
2020 A1
2021 C1
2022 B1
3006 B2

8-4

SPEAKER (SPK I) BOARD - CIRCUIT DIAGRAM

1303-A E4	1303-F B4	1304-E B3	1317 B2	2000 A4	2005 C4	2010 E4	2015 C2	3002 C3
1303-B B4	1304-A B3	1313 A1	1318 E2	2001 A4	2006 C4	2011 E4	2016 D3	3003 C3
1303-C A4	1304-B A3	1314 D1	1319 E2	2002 B4	2007 C4	2012 A2	2017 E2	3004 D3
1303-D D4	1304-C D3	1315 B1	1320 C1	2003 B4	2008 D4	2013 B2	3000 A3	3005 E3
1303-E C4	1304-D C3	1316 A2	1321 D2	2004 C4	2009 D4	2014 C2	3001 B3	9500 E3

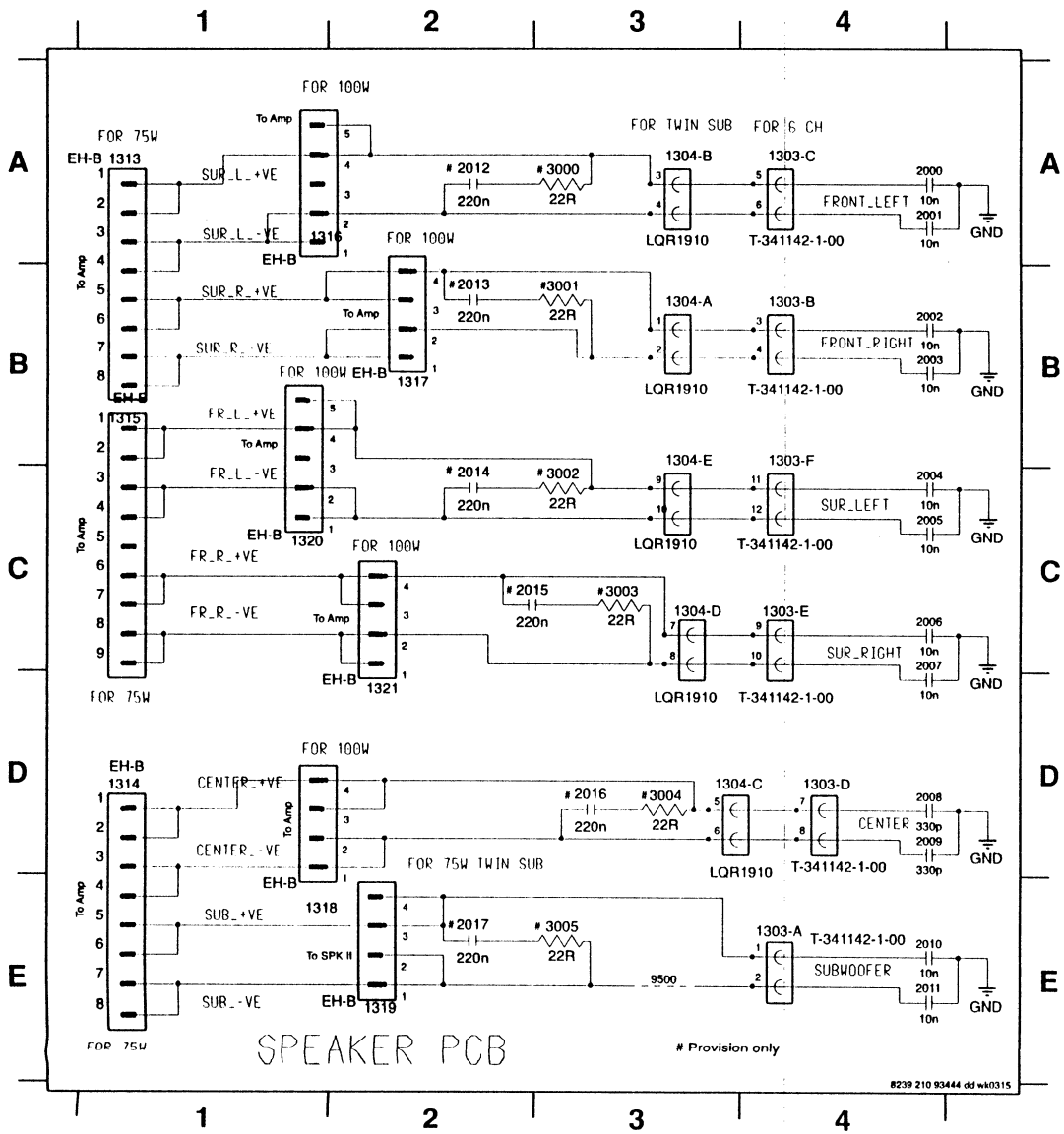

SPEAKER (SPK I) BOARD - COMPONENT & CHIP LAYOUTS

1303 E3	1313 C3	1315 A1	1317 D2	1319 E1	1321 B2
1304 B3	1314 B1	1316 C2	1318 A1	1320 A2	9500 D2

This assemby drawing shows a summary of all possible versions. For components used in a specific version see schematic and respective parts list.

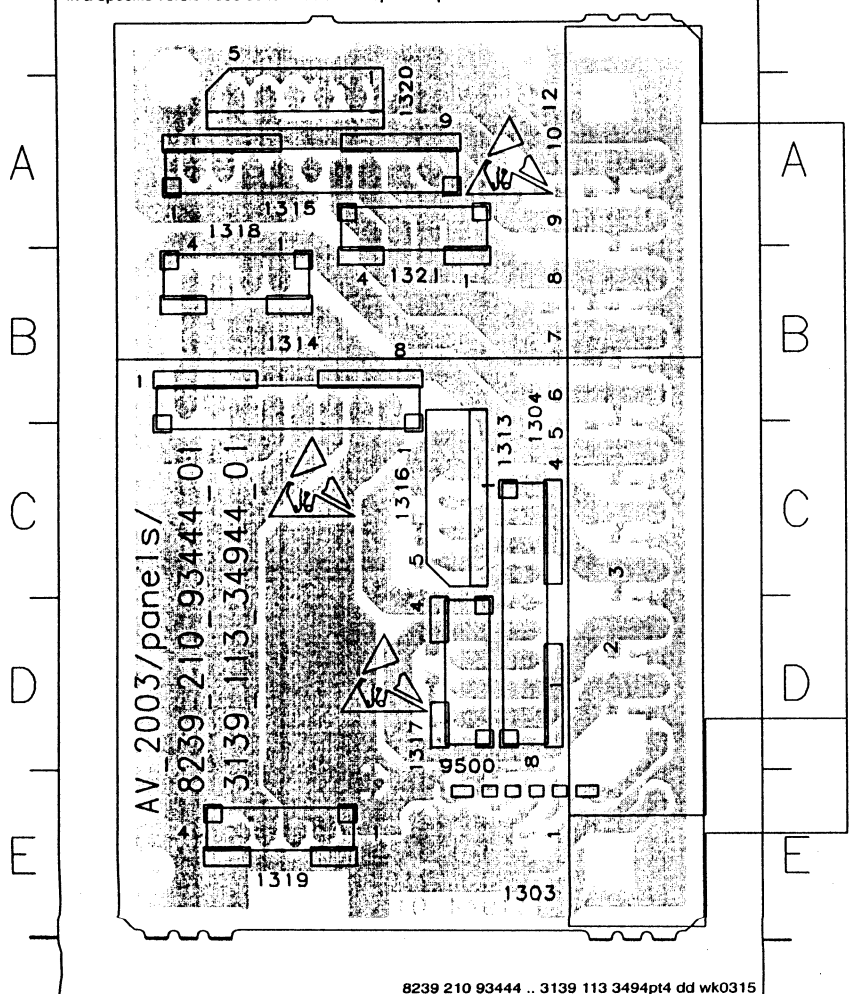

8239 210 93444 .. 3139 113 3494pt4 dd wk0315

2000 C1	2005 A1	2010 E1	2015 B1	3002 A1
2001 C1	2006 B1	2011 E1	2016 C1	3003 B1
2002 D1	2007 B1	2012 C2	2017 E1	3004 C1
2003 D1	2008 C1	2013 D2	3000 C2	3005 E1
2004 A1	2009 B1	2014 A1	3001 D2	

This assemby drawing shows a summary of all possible versions. For components used in a specific version see schematic and respective parts list.

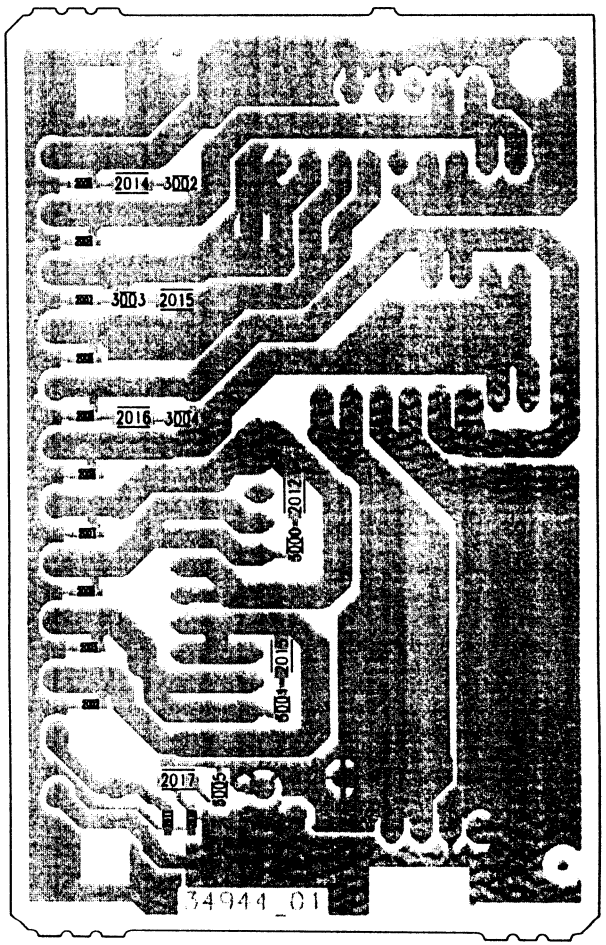

8239 210 93444 .. 3139 113 3494pt4 dd wk0315

8-6

MAINS & ECO STBY BOARD - CIRCUIT DIAGRAM

1901 A1	1908 B10	1912 B5	2904 D9	2908 E3	2912 E10	3901 C2	3905 D10	3909 E6	3914 E2	3918 D2	5901 A1	5905 D9	6904 D10	6908 D8	6912 E5	6917 E6	6921 C10	7905 E7	9904 B4
1905 A2	1909 A6	2901 D9	2905 D6	2909 E6	2913 E3	3902 D6	3906 D5	3910 E6	3915 E3	3919 D1	5902 E4	6901 D5	6905 D6	6909 D1	6914 E9	6918 D3	7901 E6	7906 D2	9905 B2
1906 D3	1910 B2	2902 D4	2906 D4	2910 E8	2914 E8	3903 D7	3907 D9	3911 E8	3916 D7	3920 C10	5903 D4	6902 D5	6906 D5	6910 D1	6915 E10	6919 D1	7902 E7	9901 A1	9906 D3
1907 A7	1911 A4	2903 D8	2907 D6	2911 E10	2915 E9	3904 D8	3908 E5	3913 E2	3917 D2	3921 B2	5904 E5	6903 D10	6907 D3	6911 D9	6916 E5	6920 E2	7904 E5	9902 A1	

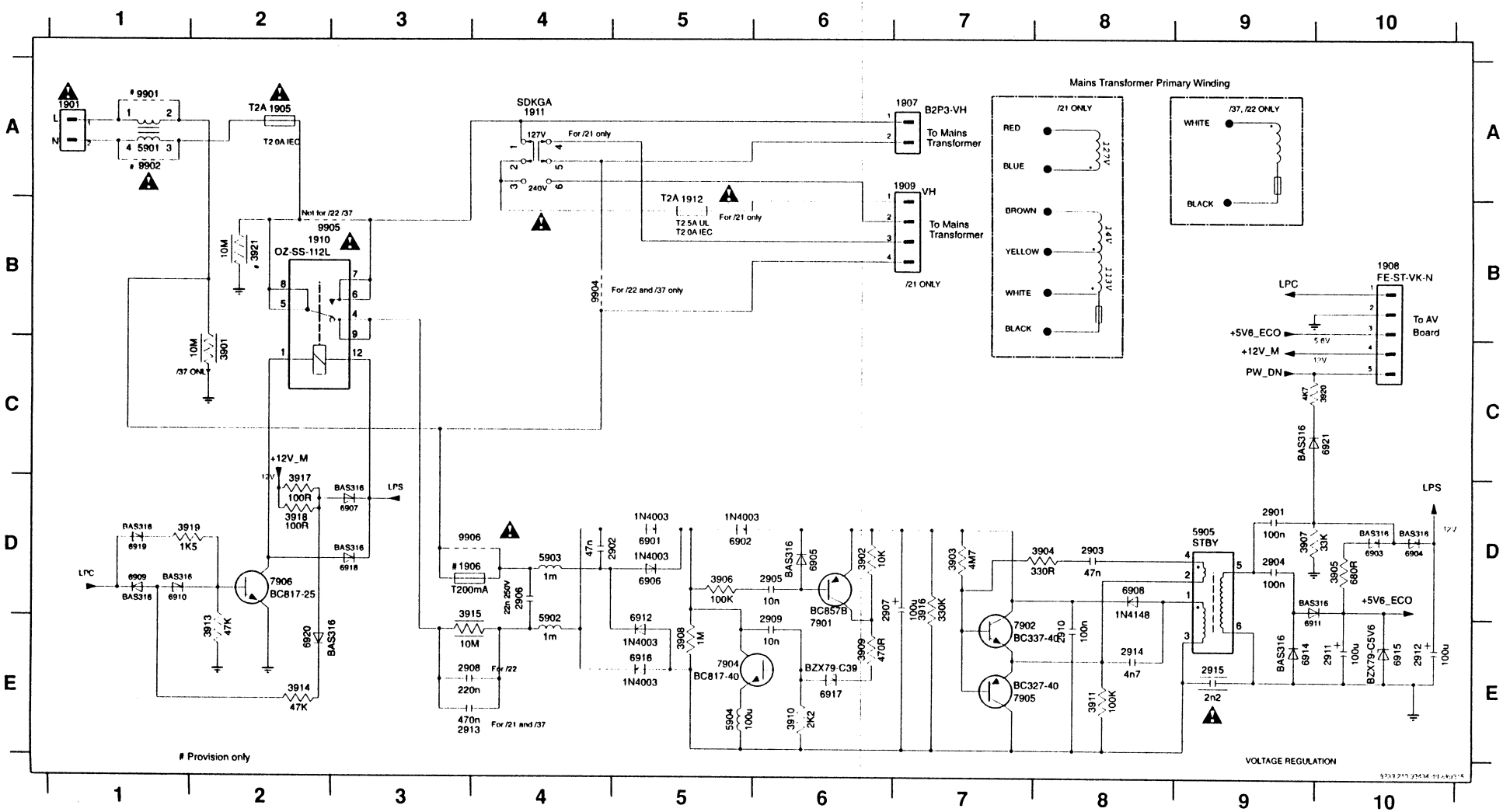

MAINS & ECO STBY BOARD - COMPONENT & CHIP LAYOUTS

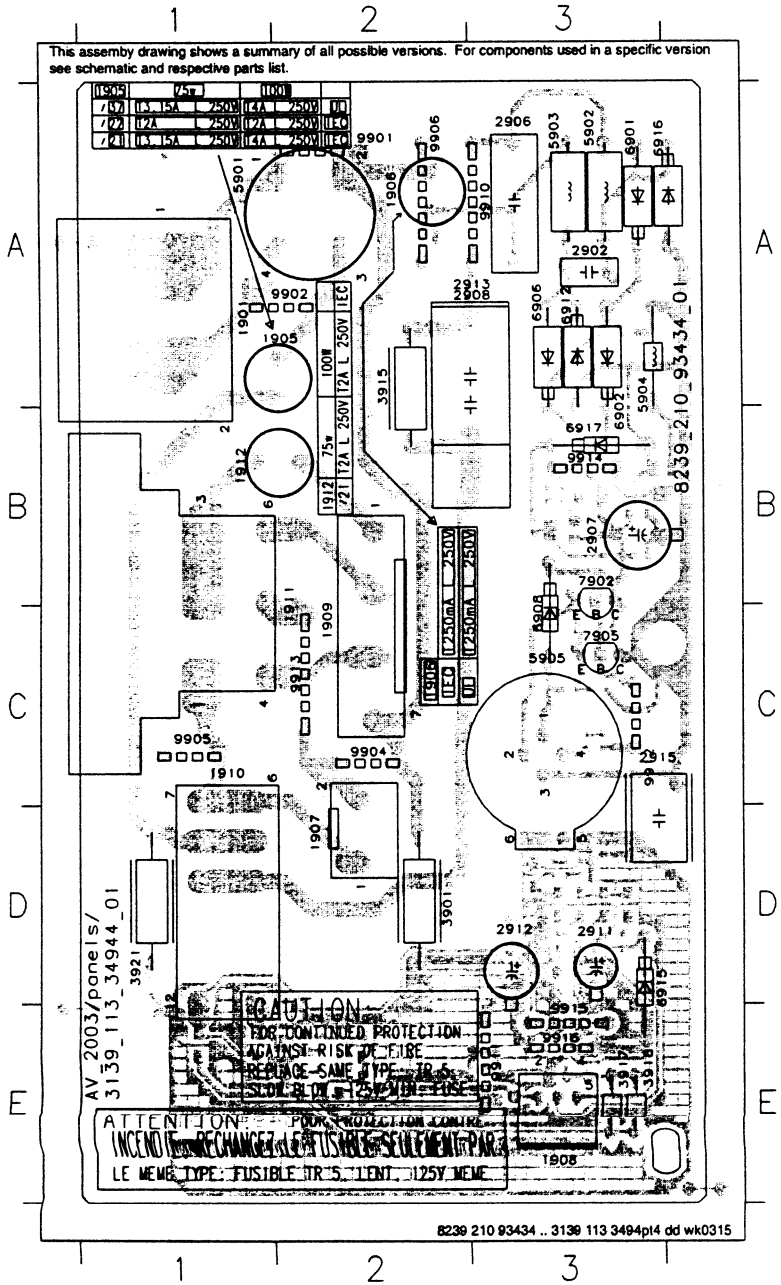

1901	A1
1905	A2
1906	A2
1907	D2
1908	E3
1909	C2
1910	C1
1911	B2
1912	B1
2902	A3
2906	A3
2907	B3
2908	A3
2911	D3
2912	D3
2913	A3
2915	C3
3901	D2
3915	A2
3917	E3
3918	E3
3921	D1
5901	A1
5902	A3
5903	A3
5904	A3
5905	C3
6901	A3
6902	B3
6906	A3
6908	C3
6912	A3
6915	D3
6916	A3
6917	B3
7902	B3
7905	C3
9901	A2
9902	A2
9904	C2
9905	C1
9906	A2
9910	A3
9911	E3
9912	C3
9913	C2
9914	B3
9915	E3
9916	E3

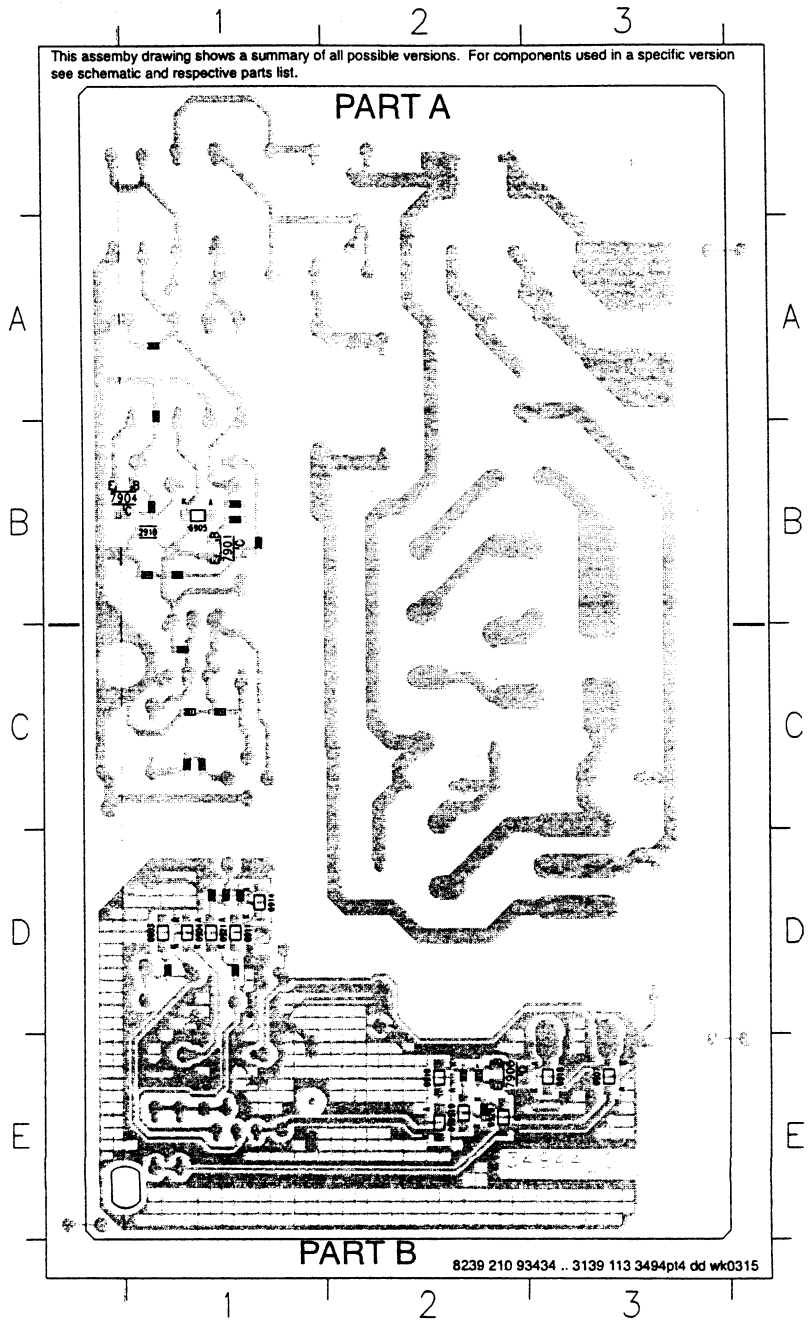

2901	D1
2903	C1
2904	C1
2905	B1
2909	B1
2910	B1
2914	C1
3902	B1
3903	C1
3904	C1
3905	D1
3906	B1
3907	D1
3908	A1
3909	B1
3910	A1
3911	C1
3913	E2
3914	E2
3916	B1
3919	E2
3920	D1
6903	D1
6904	D1
6905	B1
6907	E3
6909	E2
6910	E2
6911	D1
6914	D1
6918	E3
6919	E2
6920	E2
6921	D1
7901	B1
7904	B1
7906	E2

8-8

MAINS & ECO STBY BOARD - CHIP LAYOUT PART A

This assemby drawing shows a summary of all possible versions. For components used in a specific version see schematic and respective parts list.

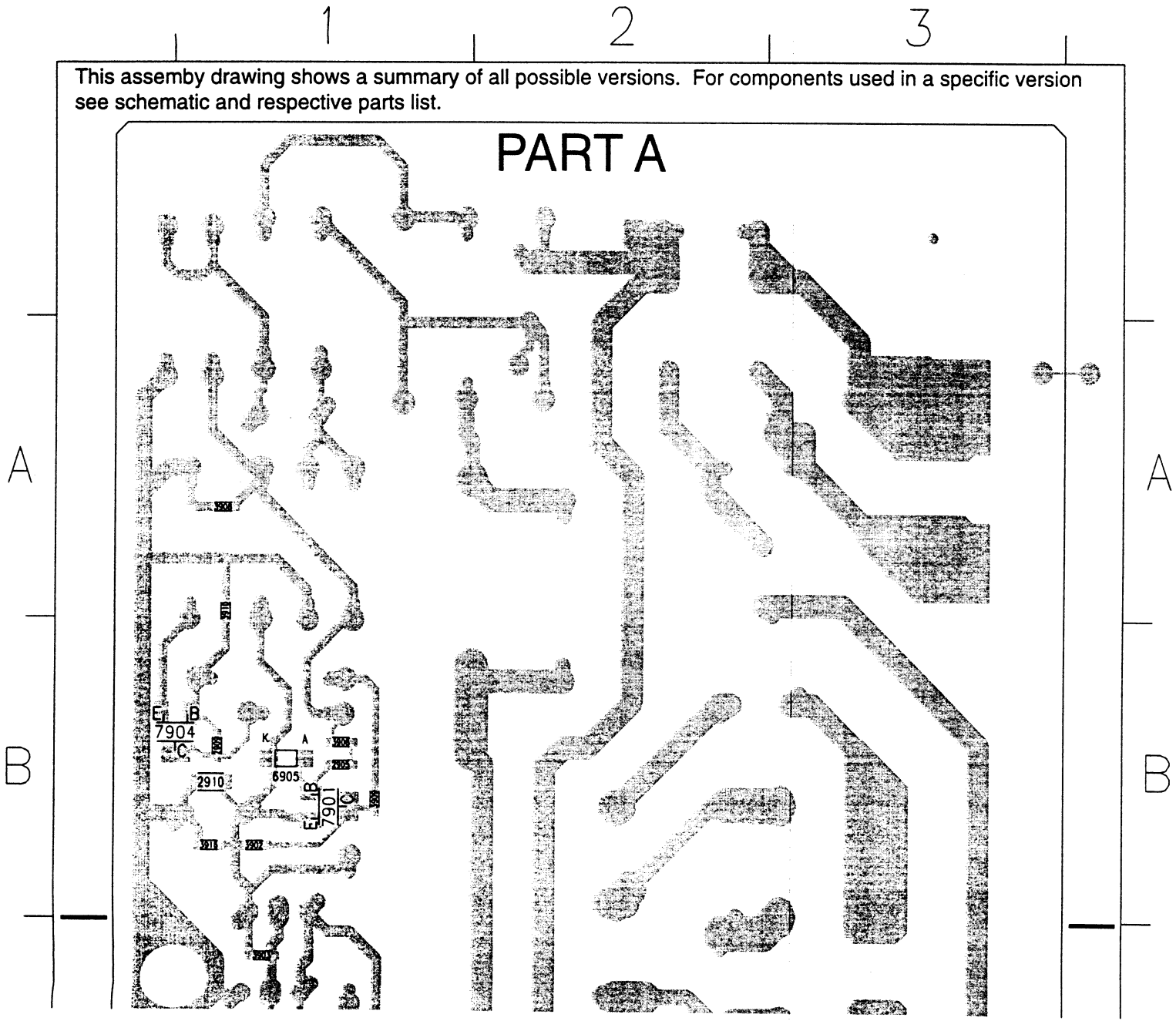

2901	D1
2903	C1
2904	D1
2905	B1
2909	B1
2910	B1
2914	C1
3902	B1
3903	C1
3904	C1
3905	D1
3906	B1
3907	D1
3908	A1
3909	B1
3910	A1
3911	C1
3913	E2
3914	E2
3916	B1
3919	E2
3920	D1
6903	D1
6904	D1
6905	B1
6907	E3
6909	E2
6910	E2
6911	D1
6914	D1
6918	E3
6919	E2
6920	E2
6921	D1
7901	B1
7904	B1
7906	E2

8-9

MAINS & ECO STBY BOARD - CHIP LAYOUT PART B

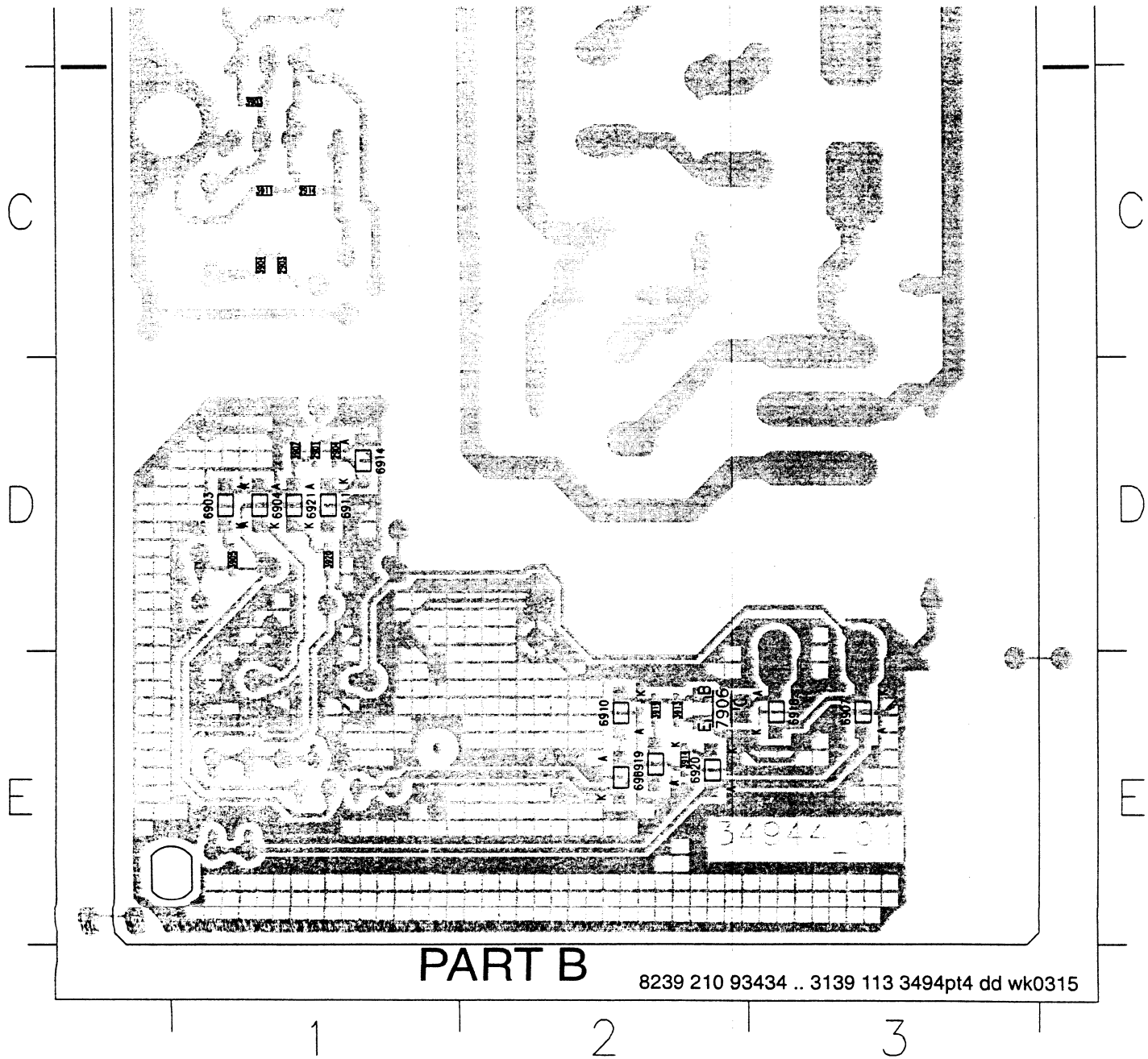

8-10

SUPPLY BOARD - CIRCUIT DIAGRAM

1100 D6	1205 D2	1264 B10	2202 E8	2206 A8	2211 D4	2217 E3	2222 A4	2226 B6	3201 A6	3205 A7	3209 B5	3217 E7	3223 E8	3227 D7	3231 C3	6203 C4	6211 A3	6216 C3	7202 A7	7207 E8	9200 A7
1200 A2	1258 D10	1270 C1	2203 A3	2207 B6	2212 D5	2218 E3	2223 A3	2227 A8	3202 A4	3206 A7	3210 A8	3218 E7	3224 C7	3228 D7	6200 B2	6205 A6	6212 D3	6217 C2	7203 B7	7208 D5	9201 A5
1203 A2	1259 D8	2200 C3	2204 A2	2208 D4	2213 D3	2219 E5	2224 D7	2228 C2	3203 A5	3207 B7	3211 B6	3219 E7	3225 C8	3229 C3	6201 A7	6208 E8	6214 E3	6218 C3	7205 B5	7209 E3	9202 E6
1204 D2	1263 A10	2201 C2	2205 A2	2209 D4	2215 E2	2220 E6	2225 D8	3200 B2	3204 B5	3208 B6	3216 B6	3222 E7	3226 C7	3230 C2	6202 C2	6209 E8	6215 D7	7200 A5	7206 B5	7210 C7	

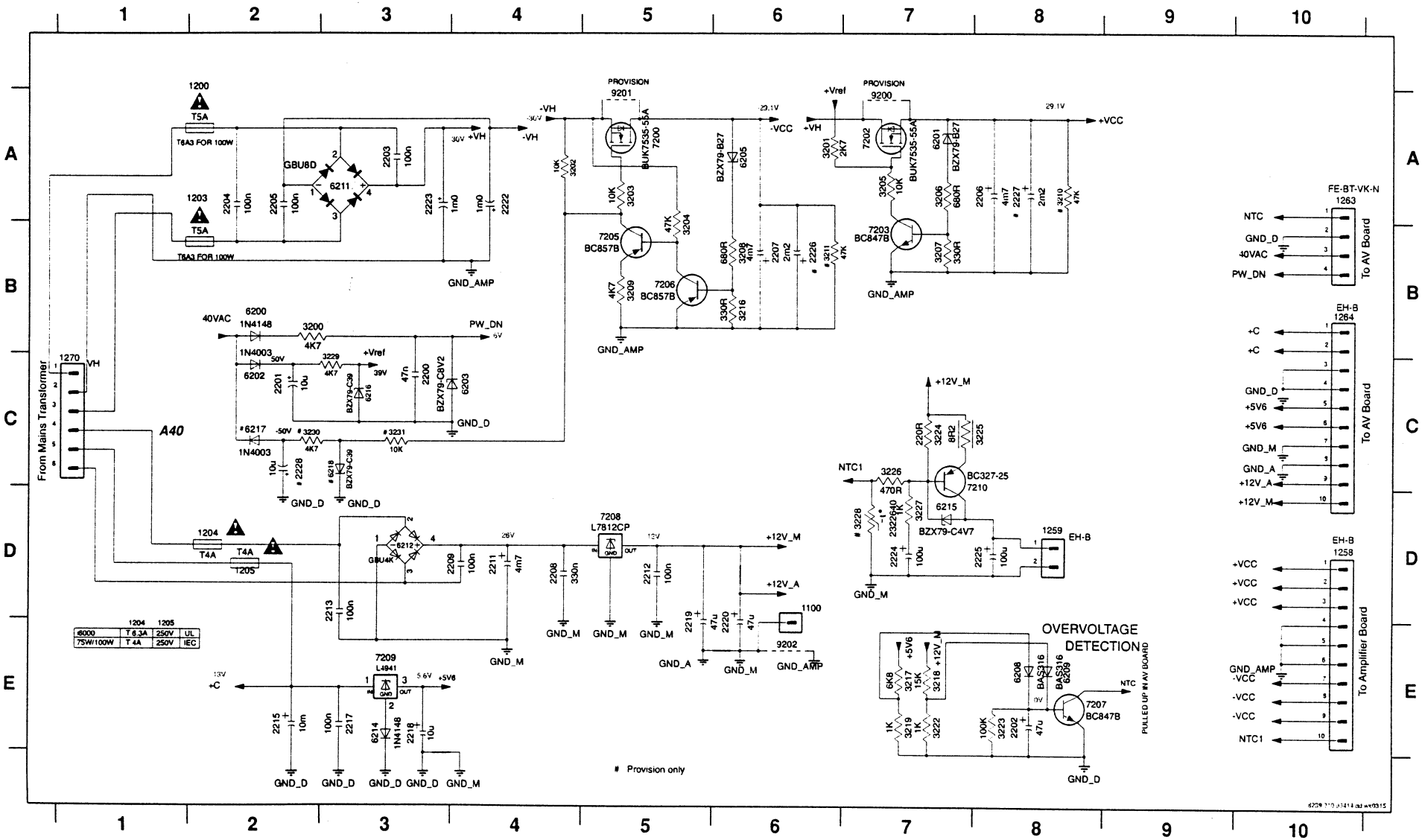

	1204	1205		
6000	T 6.3A	250V	UL	
75W/100W	T 4A	250V	IEC	

POWER MODULE PWR207

(75W 6-Channel / 75W Twin Subwoofer)
(100W 6-Channel / 100W Twin Subwoofer)

TABLE OF CONTENTS

Class-D Amplifier circuit description 8-1
Exploded view + mechanical parts 8-2
SW-out (SPK II) Board - Circuit & layout diagrams (Twin Subwoofer versions only) 8-3
Speaker (SPK I) Board - Circuit diagram 8-4
Speaker (SPK I) Board - Componet & Chip layouts 8-5
Mains & ECO Stby Board - Circuit diagram 8-6
Mains & ECO Stby Board - Component & Chip layouts 8-7
Mains & ECO Stby Board - Chip layouts Part A 8-8
Mains & ECO Stby Board - Chip layouts Part B 8-9
Supply Board - Circuit diagram 8-10
Supply Board - Component & Chip layouts 8-11
Supply Board - Chip layout Part A 8-12
Supply Board - Chip layout Part B 8-13
Amplifier Board - Clock Generator & connector - circuit 8-14
Amplifier Board - Amplifier circuit 8-15
Amplifier Board - Bottom view 8-16
Amplifier Board - Top view 8-17
Amplifier Board - Bottom view Part A 8-18
Amplifier Board - Bottom view Part B 8-19
Amplifier Board - Top view Part C 8-20
Amplifier Board - Top view Part D 8-21
Electrical parts list - Mains, Supply, Speaker & SW-out 8-22
Electrical parts list - Amplifier board 8-23

6-channel class-D amplifier

Basic operation of a class-D amplifier

Basically, the output stage of a class-D amplifier outputs a continuous square wave swinging between positive and negative power supplies with a fixed frequency ("clock" frequency) far beyond the audible range. The duty cycle of this square wave is modulated with the audio signal. The output is followed by a low-pass filter which eliminates the clock frequency and allows only the audio signal going to the speaker. See simplified drawing below.

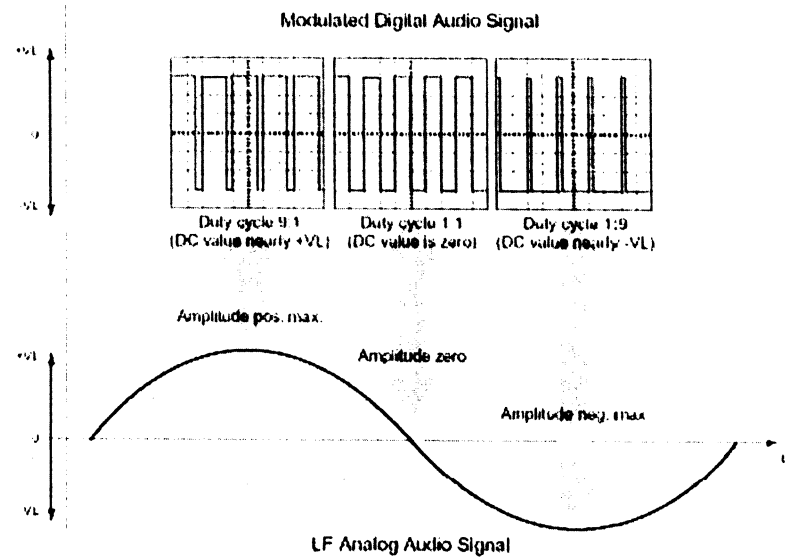

Compared to a conventional power amplifier the benefits of the Class-D amplifier are:

- higher effiency
- lower power dissipation
- smaller heatsink required
- smaller mains transformer required

The main disadvantage of this concept is:

- The amplifier is operating with a high-frequency square wave at high amplitude and currents. This requires special precautions to prevent excessive electromagnetic ratiation (EMC).

Block diagram and operation

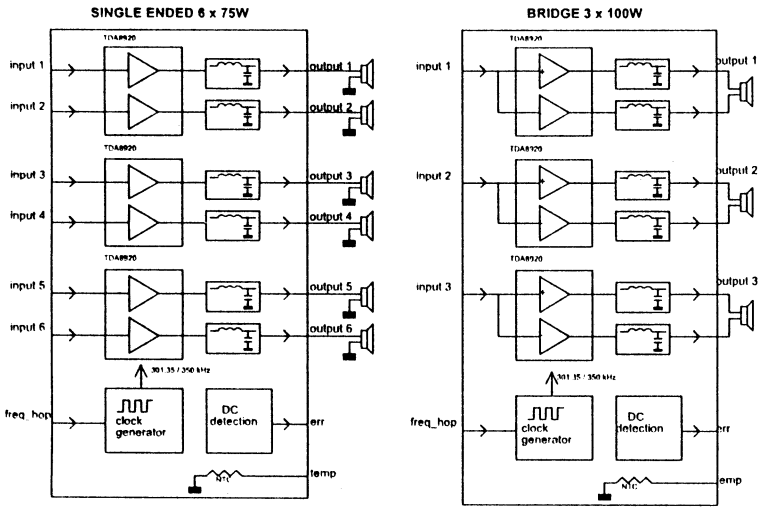

• clock oscillator

The clock frequency is generated around IC7600. Using 2 extra transistors (7602 and 7608) and 2 ceramic resonators it can be operated at 2 frequencies: 602.7kHz and 700kHz. The frequency is selected by the signal "FREQ_HOP" coming from connector 1301 pin 9.
When FREQ_HOP is low, the output of 7600-1 will be high. This switches transistor 7602 on, and connects resonator 1600 (602.7kHz) to inverter 7600-3. Similarly, when FREQ_HOP is high, resonator 1601 is connected to 7600-3.
The output frequency is divided by two by IC7607, resulting in 301.35kHz or 350kHz.
The purpose of a selectable clock frequency is related to the disturbance of the tuner which is built-in together with this amplifier. In MW, the software of the set microprocessor will select the other clock frequency in case the amplifier clock interferes with the tuned station.

• Class-D amplifier TDA8920 and low-pass filter

The TDA8920 is a two channel audio power amplifier using class-D technology. The audio input signal is converted into a digital Pulse Width Modulated (PWM) signal via an analog input stage and PWM modulator. It is then fed to the power stage which outputs a high power PWM signal which switches between the main supply lines.
The TDA8920 is followed by a 2nd-order low-pass filter. It has a cut-off frequency around 50kHz and converts the PWM signal into analog audio signal across the loudspeaker.
The TDA8920 has a temperature protection and a current limiter built-in.
Furthermore, the IC can be put in active, mute and standby mode.
- Active mode (amplifier fully operational) with output signal.
- Mute mode: the amplifiers are operational, but the audio is muted
- Standby mode; with a very low supply current, the output stage is switched off.

• DC-detection

The DC-detection circuit monitors all 6 outputs for DC. Whenever one or more outputs contain DC for more than 1 second, the circuit will be activated. A positive voltage will activate transistor 7710 and pin 10 of connector 1301 will be pulled down. In case of a negative voltage, transistor 7716 will be activated, which in turn activates 7710. The set microprocessor will take further action.

MECHANICAL EXPLODED VIEW

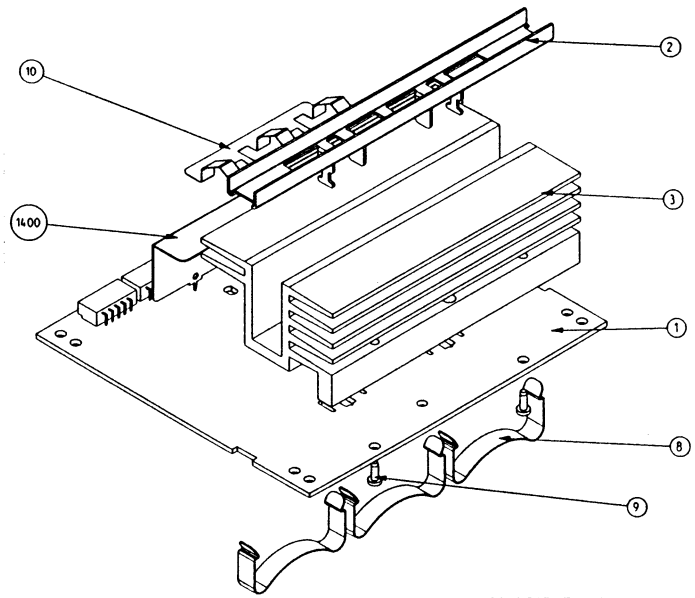

3104 217 07180 bl110

MECHANICAL PARTS LIST & SCREWS

8	4822 492 11735	SPRING, TRANSISTOR
9	-	D2.3 x 8
10	3104 211 29881	EARTH SPRING

Note: Only the parts mentioned in this list are normal service spare parts.

SUPPLY BOARD - COMPONENT LAYOUT

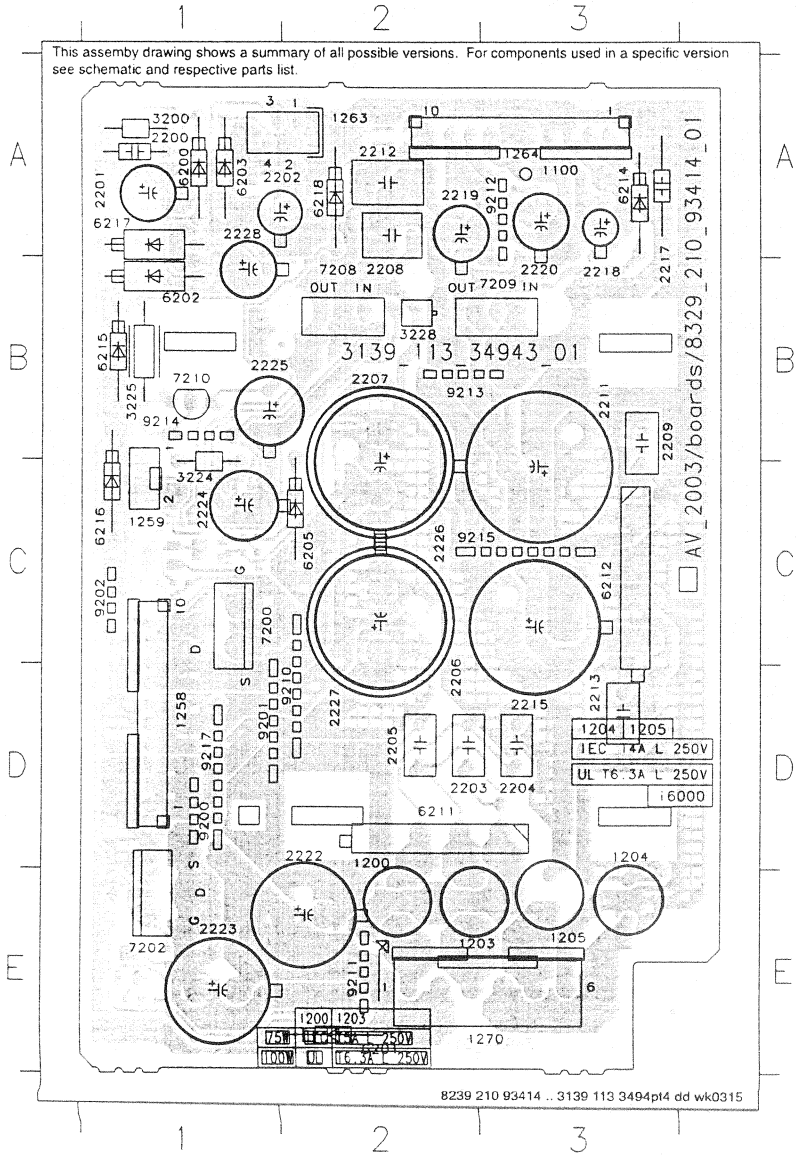

1100	A3
1200	D2
1203	E2
1204	D3
1205	E3
1258	D1
1259	C1
1263	A2
1264	A3
1270	E3
2200	A1
2201	A1
2202	A1
2203	D2
2204	D2
2205	D2
2206	D2
2207	B2
2208	B2
2209	B3
2211	B3
2212	A2
2213	D3
2215	D3
2217	B3
2218	B3
2219	A2
2220	B3
2222	D2
2223	E1
2224	C1
2225	B1
2226	C2
2227	D2
2228	A1
3200	A1
3224	C1
3225	B1
3228	B2
6200	A1
6201	E2
6202	B1
6203	A1
6205	C2
6211	D2
6212	C3
6214	A3
6215	B1
6216	C1
6217	A1
6218	A2
7200	C1
7202	E1
7208	B2
7209	B3
7210	B1
9200	D1
9201	D1
9202	C1
9210	D2
9211	E2
9212	A3
9213	B2
9214	B1
9215	C2
9217	D1

SUPPLY BOARD - CHIP LAYOUT

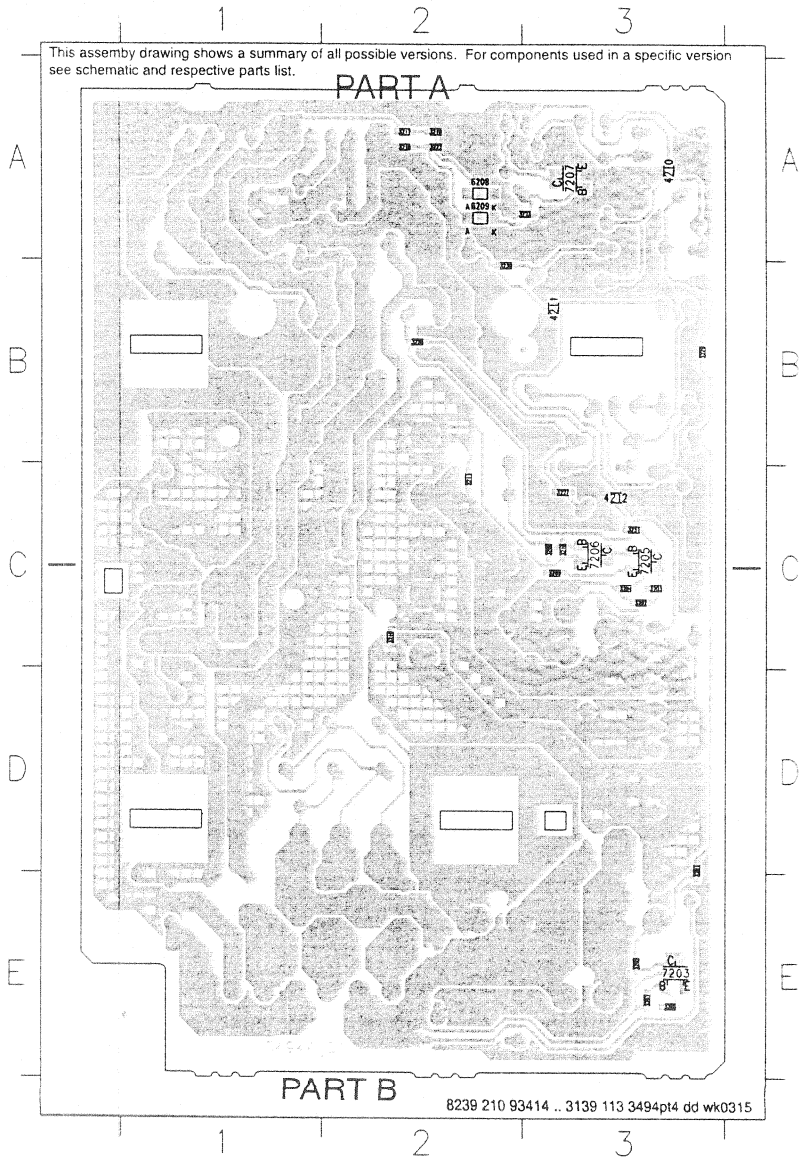

3201	D3
3202	C3
3203	C3
3204	C3
3205	E3
3206	E3
3207	E3
3208	C3
3209	C3
3210	C2
3211	C2
3216	C3
3217	A2
3218	A2
3219	A2
3222	A2
3223	A3
3226	B3
3227	B3
3229	B3
3230	B3
3231	C3
4210	A3
4211	B3
4212	C3
6208	A2
6209	A2
7203	E3
7205	C3
7206	C3
7207	A3

8-12

SUPPLY BOARD - CHIP LAYOUT PART A

This assemby drawing shows a summary of all possible versions. For components used in a specific version see schematic and respective parts list.

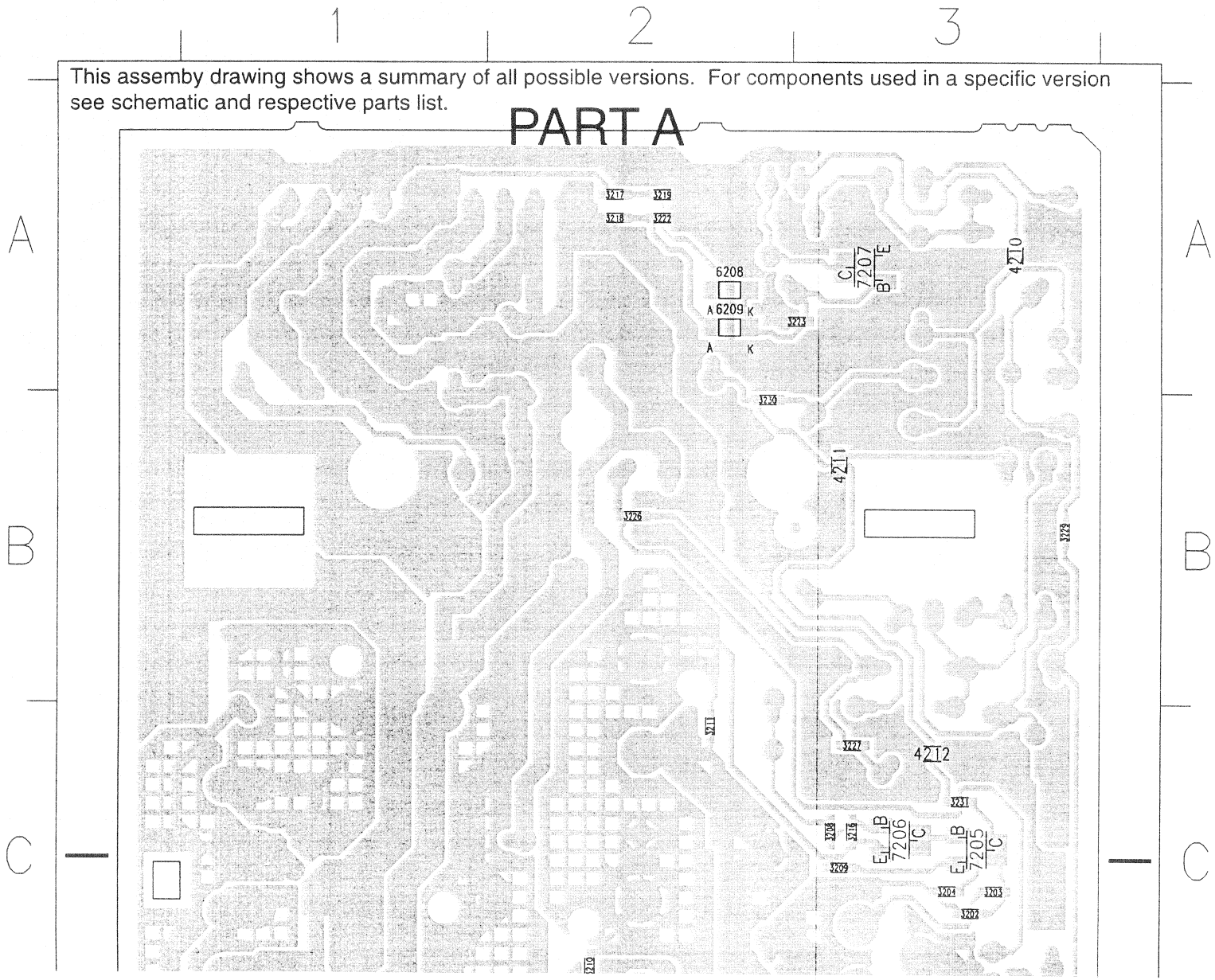

3201	D3
3202	C3
3203	C3
3204	C3
3205	E3
3206	E3
3207	E3
3208	C3
3209	C3
3210	C2
3211	C2
3216	C3
3217	A2
3218	A2
3219	A2
3222	A2
3223	A3
3226	B2
3227	C3
3229	B3
3230	B2
3231	C3
4210	A3
4211	B3
4212	C3
6208	A2
6209	A2
7203	E3
7205	C3
7206	C3
7207	A3

8-14

AMPLIFIER BOARD - CLOCK GENERATOR & CONNECTION CIRCUIT

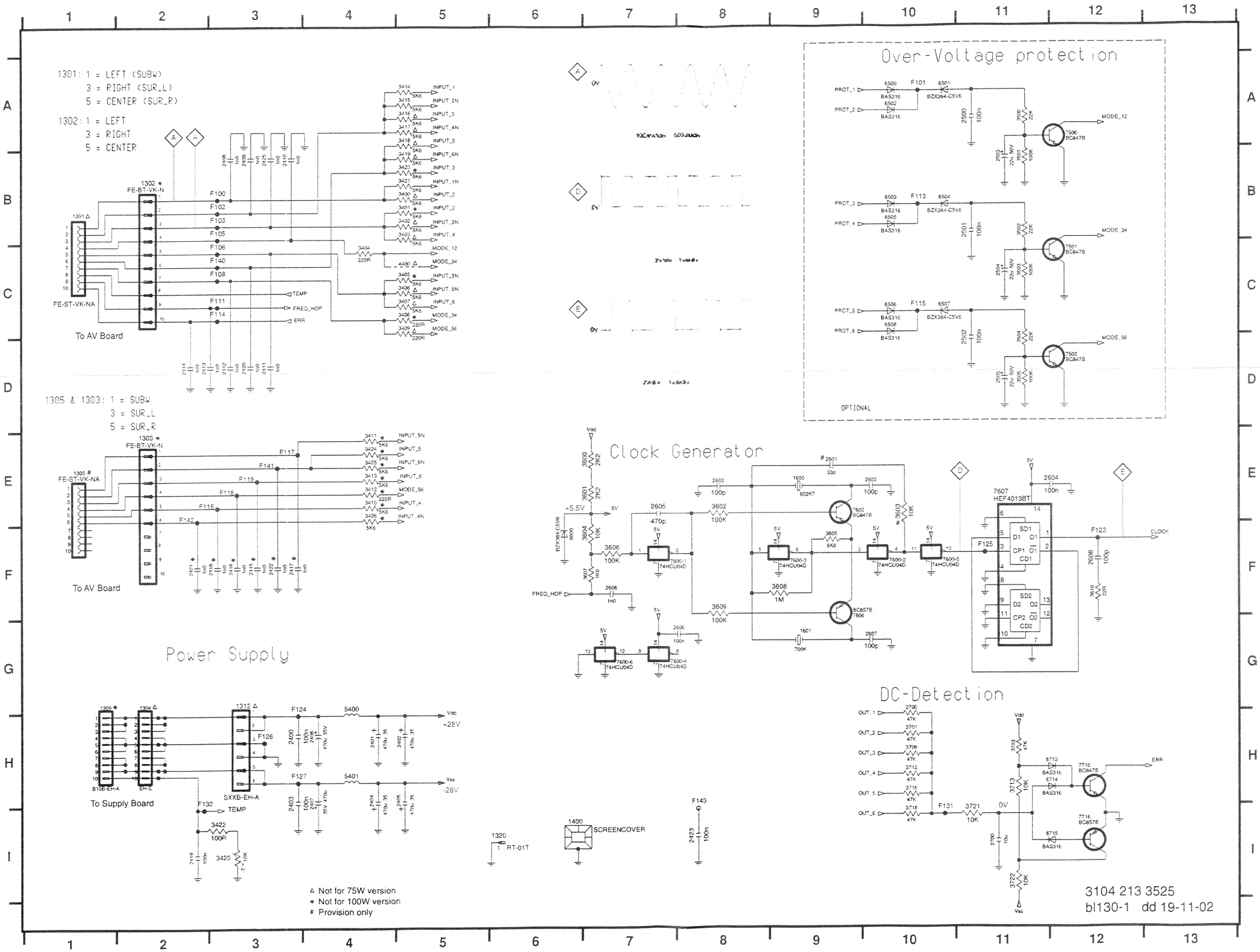

1301 B1	6505 B10
1302 B2	6506 C10
1303 E2	6507 C10
1304 G2	6508 C10
1305 E1	6600 F6
1309 G1	6713 H12
1312 G3	6714 H12
1320 I6	6715 I12
1400 I6	7500 A12
1600 E9	7501 C12
1601 G9	7502 D12
2400 H3	7600-1 F8
2401 H4	7600-2 F10
2402 H5	7600-3 F9
2403 H3	7600-4 G8
2404 H4	7600-5 F11
2405 H5	7600-6 G7
2406 H4	7602 E9
2407 H4	7607 E11
2408 B3	7608 F9
2409 B3	7710 H12
2410 B3	7716 I12
2411 D3	F100 B3
2412 D3	F101 A10
2413 D2	F102 B3
2414 D2	F103 B3
2415 F3	F105 B3
2416 F3	F106 C3
2417 F3	F108 C3
2418 F3	F111 C3
2419 I2	F113 B10
2420 D3	F114 C3
2421 F2	F115 C10
2422 F3	F116 E2
2423 I6	F117 E3
2425 B3	F118 E3
2500 A11	F119 E3
2501 B11	F123 F12
2502 D11	F124 G3
2503 B11	F125 F11
2504 C11	F126 H3
2505 D11	F127 H3
2600 G8	F131 I10
2601 E9	F132 H2
2602 E8	F140 C3
2603 E10	F141 E3
2604 E12	F142 E2
2605 E7	F143 H6
2606 F7	
2607 G10	
2608 F12	
2700 I11	
3400 B5	
3401 B5	
3402 B5	
3403 B5	
3404 C4	
3405 C5	
3406 C5	
3407 C5	
3408 C5	
3409 C5	
3410 E4	
3411 E4	
3412 E4	
3413 E4	
3414 A5	
3415 A5	
3416 A5	
3417 A5	
3418 A5	
3419 B5	
3420 I3	
3421 B5	
3422 I3	
3423 B5	
3424 E4	
3425 E4	
3426 E4	
3500 A11	
3501 B11	
3502 B11	
3503 C11	
3504 D11	
3505 D11	
3600 E7	
3601 E7	
3602 E8	
3603 E10	
3604 F7	
3605 F9	
3606 F7	
3607 F7	
3608 F9	
3609 F8	
3610 F12	
3700 G10	
3701 H10	
3703 H11	
3709 H10	
3712 H10	
3713 H11	
3716 H10	
3718 I10	
3721 I11	
3722 I11	
4400 C5	
5400 G4	
5401 H4	
6500 A10	
6501 A10	
6502 A10	
6503 B10	
6504 B10	

8-13

SUPPLY BOARD - CHIP LAYOUT PART B

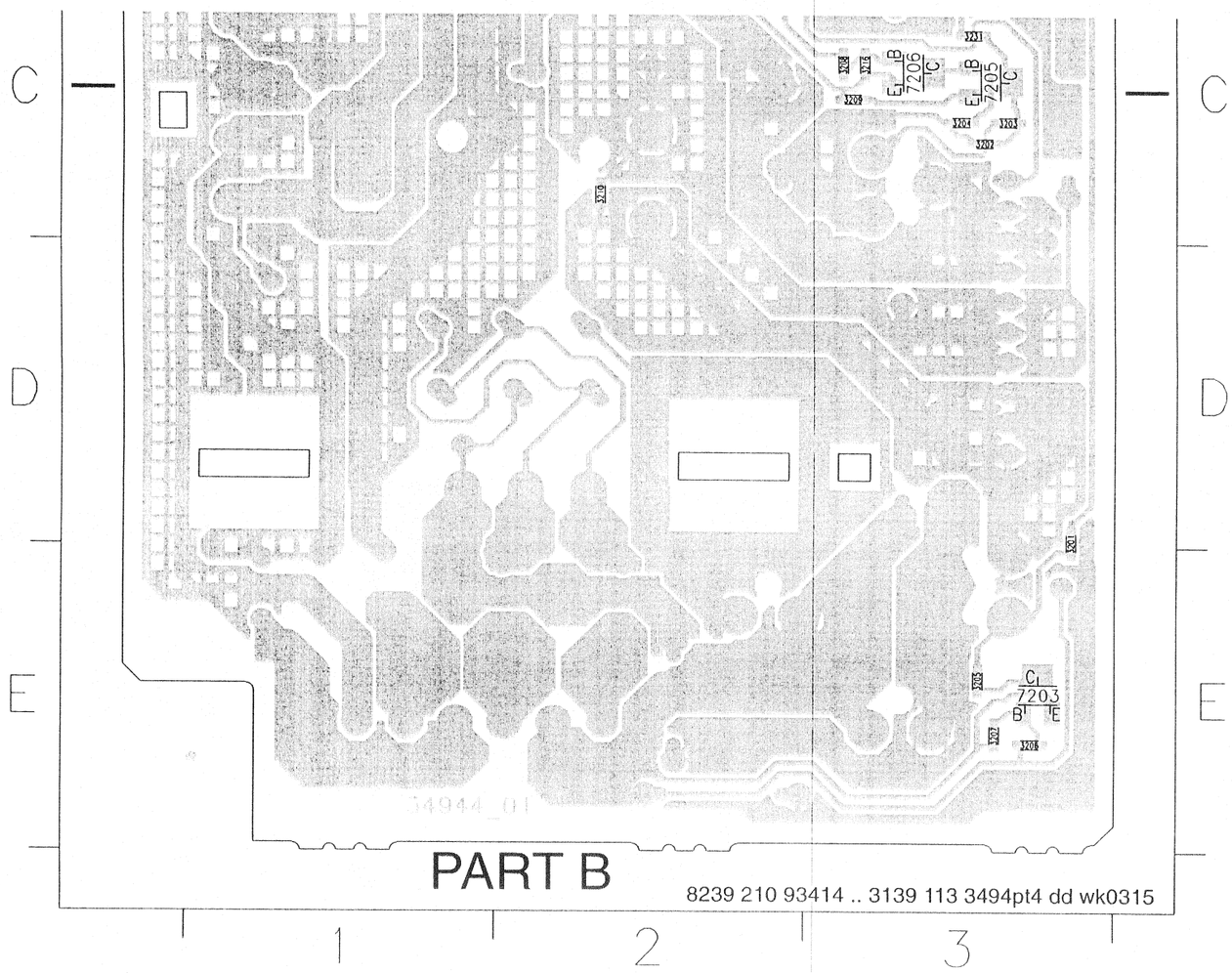

AMPLIFIER BOARD - BOTTOM VIEW

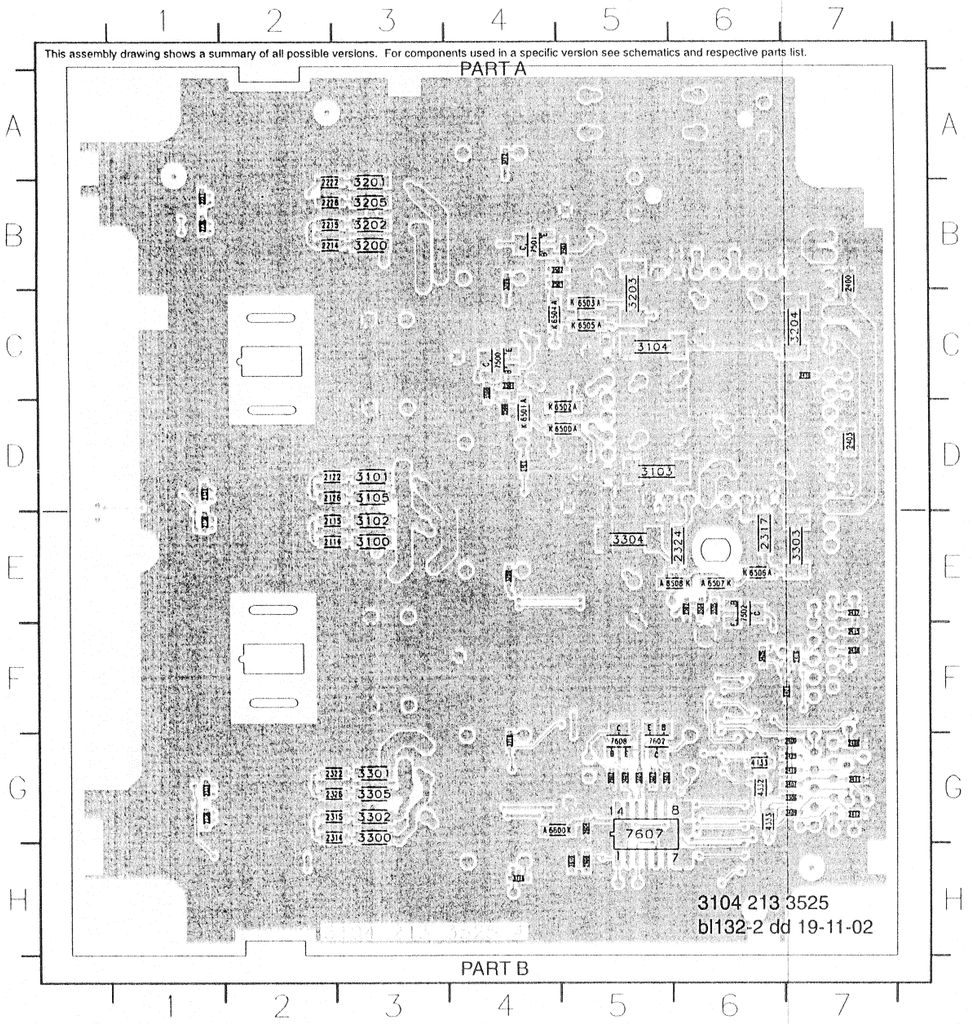

2114	E2	3610	H5		
2115	E2	3700	E4		
2122	D2	3701	D4		
2126	D2	3709	B4		
2131	D1	3712	A4		
2136	E1	3716	H4		
2214	B2	3718	G4		
2215	B2	4133	G6		
2222	B2	4333	G6		
2226	B2	6500	D5		
2231	B1	6501	D4		
2236	B1	6502	D5		
2314	G2	6503	C5		
2315	G2	6504	C4		
2317	E6	6505	C5		
2322	G2	6506	E6		
2324	E6	6507	E6		
2326	G2	6508	E6		
2331	G1	6600	G4		
2332	G6	7500	C4		
2336	G1	7501	B4		
2400	B7	7502	E6		
2403	D7	7602	G5		
2408	G7	7607	G5		
2409	G7	7608	G5		
2410	G7				
2411	G7				
2412	G7				
2415	F7				
2416	F7				
2417	E7				
2418	F7				
2419	C7				
2421	F7				
2425	G7				
2500	D4				
2501	B5				
2502	E6				
2603	G5				
2604	G5				
2607	G5				
2608	H5				
3100	E3				
3101	D3				
3102	E3				
3103	D5				
3104	C5				
3105	D3				
3200	B3				
3201	B3				
3202	B3				
3203	C5				
3204	C7				
3205	B3				
3300	G3				
3301	G3				
3302	G3				
3303	E7				
3304	E5				
3305	G3				
3306	G7				
3407	G7				
3409	G7				
3426	F6				
3500	C4				
3501	C4				
3502	B5				
3503	B5				
3504	E6				
3505	E6				
3602	G5				
3605	G5				
3609	G5				

AMPLIFIER BOARD - TOP VIEW

1301	G1	2406	A2	5302	H4
1302	G1	2407	B3	5303	G4
1303	F1	2413	G1	5400	A3
1304	D1	2414	G1	5401	A3
1305	F1	2420	H1	6713	F3
1306	D3	2422	E1	6714	F3
1307	D2	2423	C2	6715	F3
1308	B2	2503	C4	7100	D6
1309	D1	2504	B3	7200	B6
1312	B1	2505	E3	7300	G6
1316	D3	2600	H3	7600	G3
1317	D2	2601	G3	7710	F3
1318	B2	2602	G3	7716	F3
1320	F2	2605	G3		
1400	D4	2606	G3		
1600	G2	2700	F3		
1601	G3	3106	G2		
2101	D7	3107	D6		
2102	E7	3108	F2		
2104	D5	3109	D6		
2105	D5	3206	F1		
2106	D5	3207	A6		
2107	E5	3208	G2		
2108	E5	3209	A6		
2111	E5	3307	G6		
2116	D3	3308	G2		
2117	D3	3309	G6		
2120	D5	3400	F1		
2124	C3	3401	G1		
2125	C3	3402	G1		
2127	D5	3403	F1		
2128	E5	3404	G1		
2129	E6	3405	G1		
2130	D7	3406	G1		
2134	E5	3408	G1		
2135	E6	3410	F1		
2201	B7	3411	E1		
2202	B7	3412	F1		
2204	B5	3413	F1		
2205	A5	3414	F1		
2206	B5	3415	G1		
2207	B5	3416	F1		
2208	B5	3417	F1		
2211	B5	3418	G1		
2216	C2	3419	G1		
2217	C3	3420	F7		
2220	B5	3421	F2		
2224	C1	3422	C1		
2225	C2	3423	H1		
2227	B5	3424	E1		
2228	B5	3425	E1		
2229	B6	3600	G3		
2230	A7	3601	G3		
2234	B5	3603	G3		
2235	B6	3604	G3		
2301	G7	3606	G3		
2302	G7	3607	G3		
2304	G5	3608	G3		
2305	G5	3703	F3		
2306	G5	3713	F3		
2307	G5	3721	F3		
2308	H5	3722	F3		
2311	G5	4132	G2		
2316	D2	4137	F2		
2320	G5	4138	F2		
2325	D2	4232	F2		
2327	G5	4233	F2		
2328	G5	4237	G2		
2329	H6	4238	F2		
2330	G7	4337	G2		
2334	G5	4338	G2		
2335	H6	4400	G2		
2401	C5	5102	E4		
2402	E5	5103	D4		
2404	D5	5202	B4		
2405	F5	5203	A4		

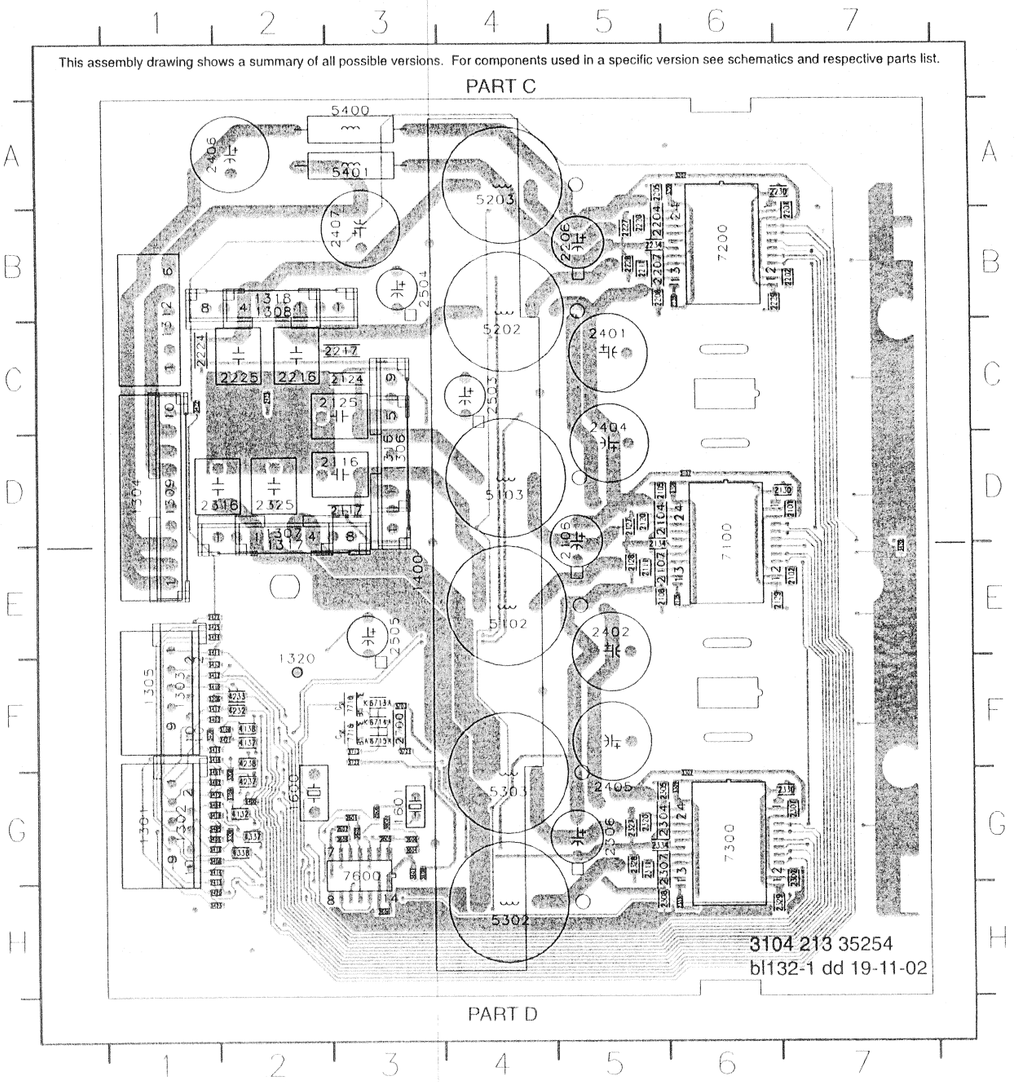

AMPLIFIER BOARD - AMPLIFIER CIRCUIT

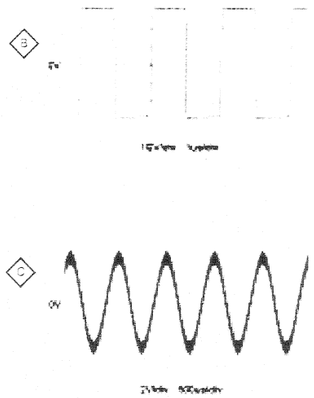

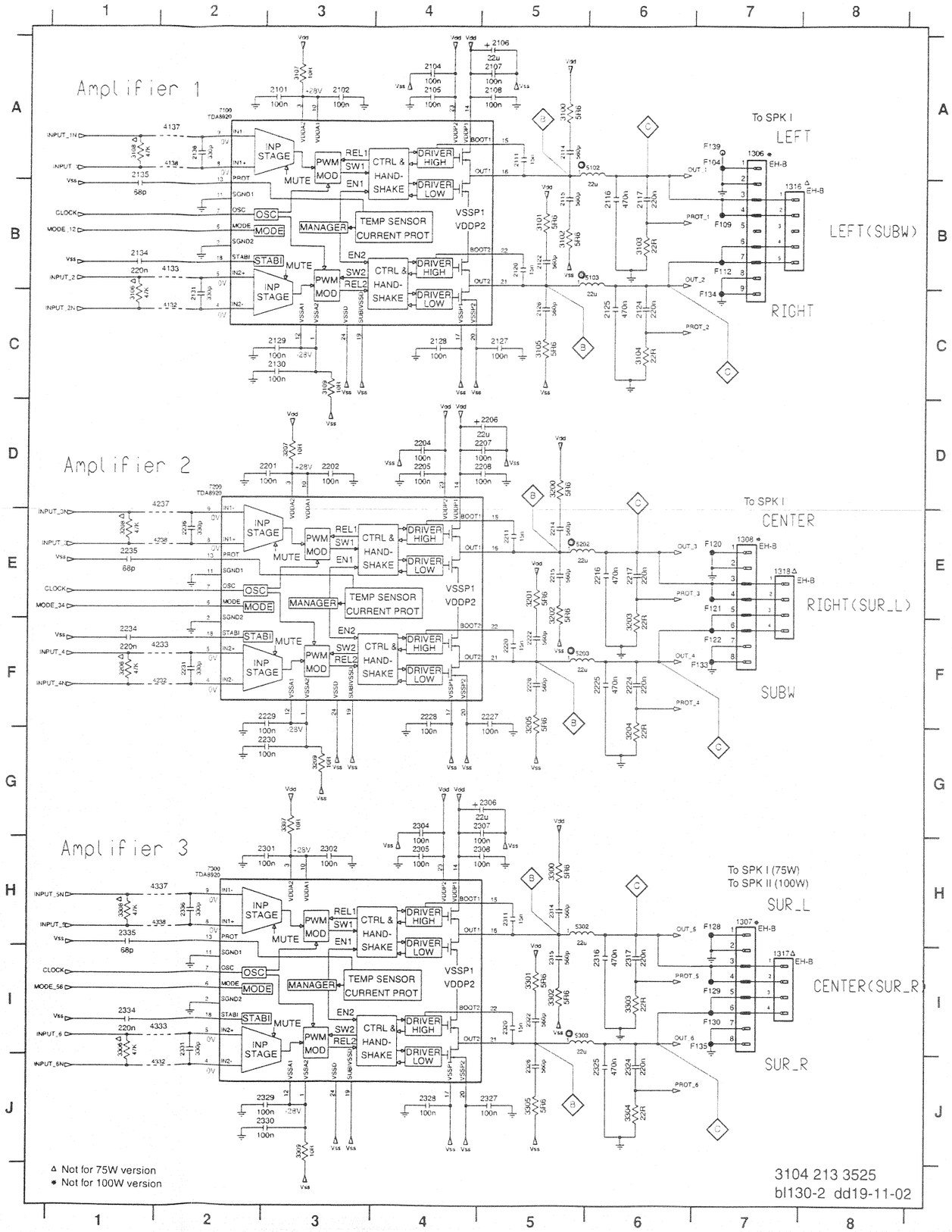

1306 A7
1307 H7
1308 E7
1316 B7
1317 I7
1318 E7
2101 A3
2102 A3
2104 A4
2105 A4
2106 A5
2107 A5
2108 A5
2111 A5
2114 A5
2115 B5
2116 B6
2117 B6
2120 B5
2122 B5
2124 C5
2125 C6
2126 C5
2127 C5
2128 C4
2129 C3
2130 C3
2131 C2
2134 B1
2135 A1
2136 A2
2201 D3
2202 D3
2204 D4
2205 D4
2206 D5
2207 D5
2208 D5
2211 E5
2214 E5
2215 E5
2216 E6
2217 E6
2220 F5
2222 F5
2224 F6
2225 F6
2226 F5
2227 F5
2228 F4
2229 F3
2230 G3
2231 F2
2234 F1
2235 E1
2236 E2
2301 H3
2302 H3
2304 G4
2305 H4
2306 G5
2307 G5
2308 H5
2311 H5
2314 H5
2315 I5
2316 I6
2317 I6
2320 I5
2322 I5
2324 J6
2325 J6
2326 J5
2327 J5
2328 J4
2329 J3
2330 J3
2331 I2
2334 I1
2335 H1
2336 H2
3100 A5
3101 B5
3102 B5
3103 B6
3104 C6
3105 C5
3106 C1
3107 A3
3108 A1
3109 C3
3200 D5
3201 E5
3202 E5
3203 F6
3204 G6
3205 F5
3206 F1
3207 D3
3208 E1
3209 G3
3300 H5
3301 I5
3302 I5
3303 I6
3304 J6
3305 J5
3306 I1
3307 G3
3308 H1
3309 J3
4132 C2
4133 B2
4137 A2
4138 A2
4232 F2
4233 F2
4237 D2
4238 E2
4332 J2
4333 I2
4337 H2
4338 H2
5102 A6
5103 B6
5202 E5
5203 F5
5302 H5
5303 I5
7100 A2
7200 D2
7300 H2
F104 A7
F109 B7
F112 B7
F120 E7
F121 E7
F122 F7
F128 H7
F129 I7
F130 I7
F133 F7
F134 C7
F135 I7
F139 A7

AMPLIFIER BOARD - TOP VIEW PART C

This assembly drawing shows a summary of all possible versions. For components used in a specific version see schematics and respective parts list.

PART C

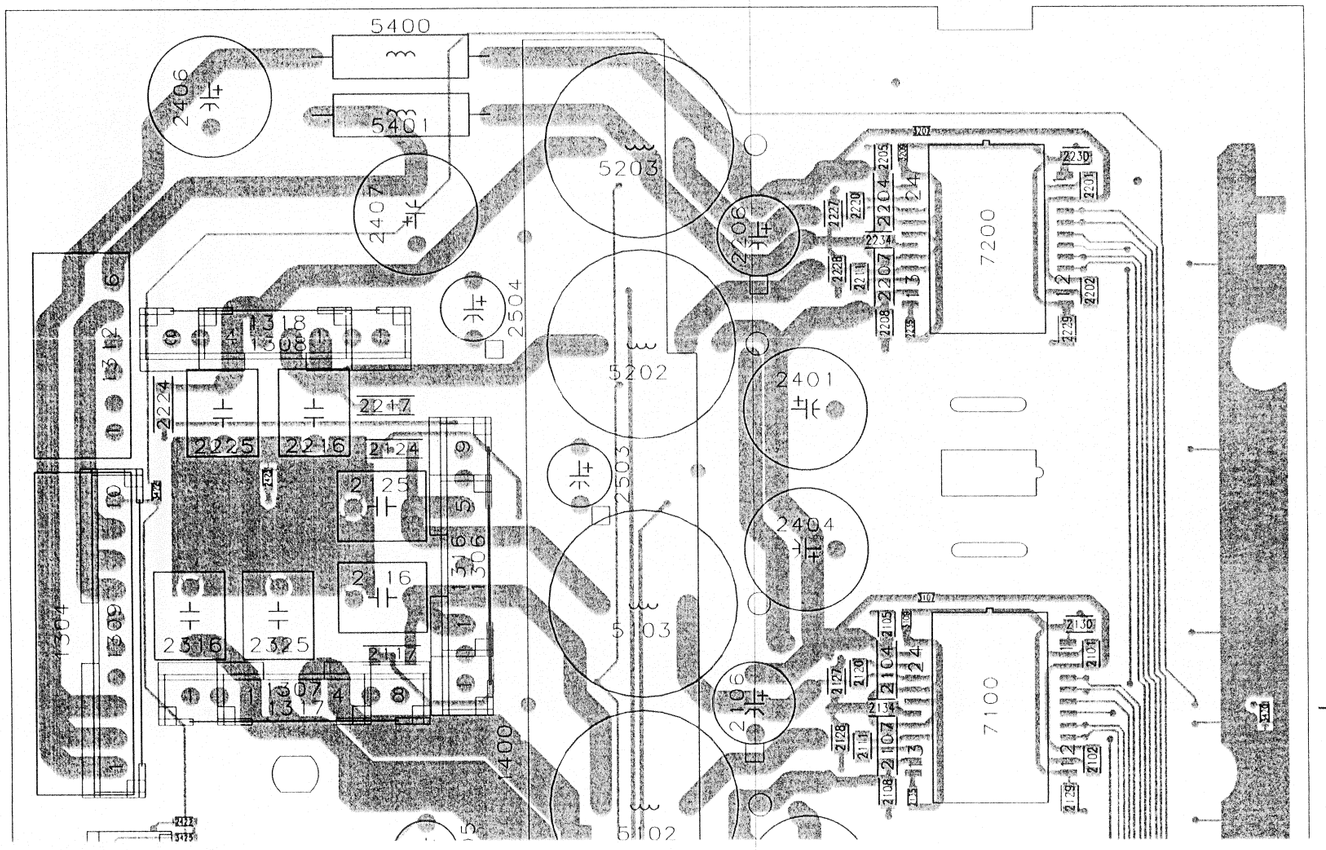

AMPLIFIER BOARD - TOP VIEW PART D

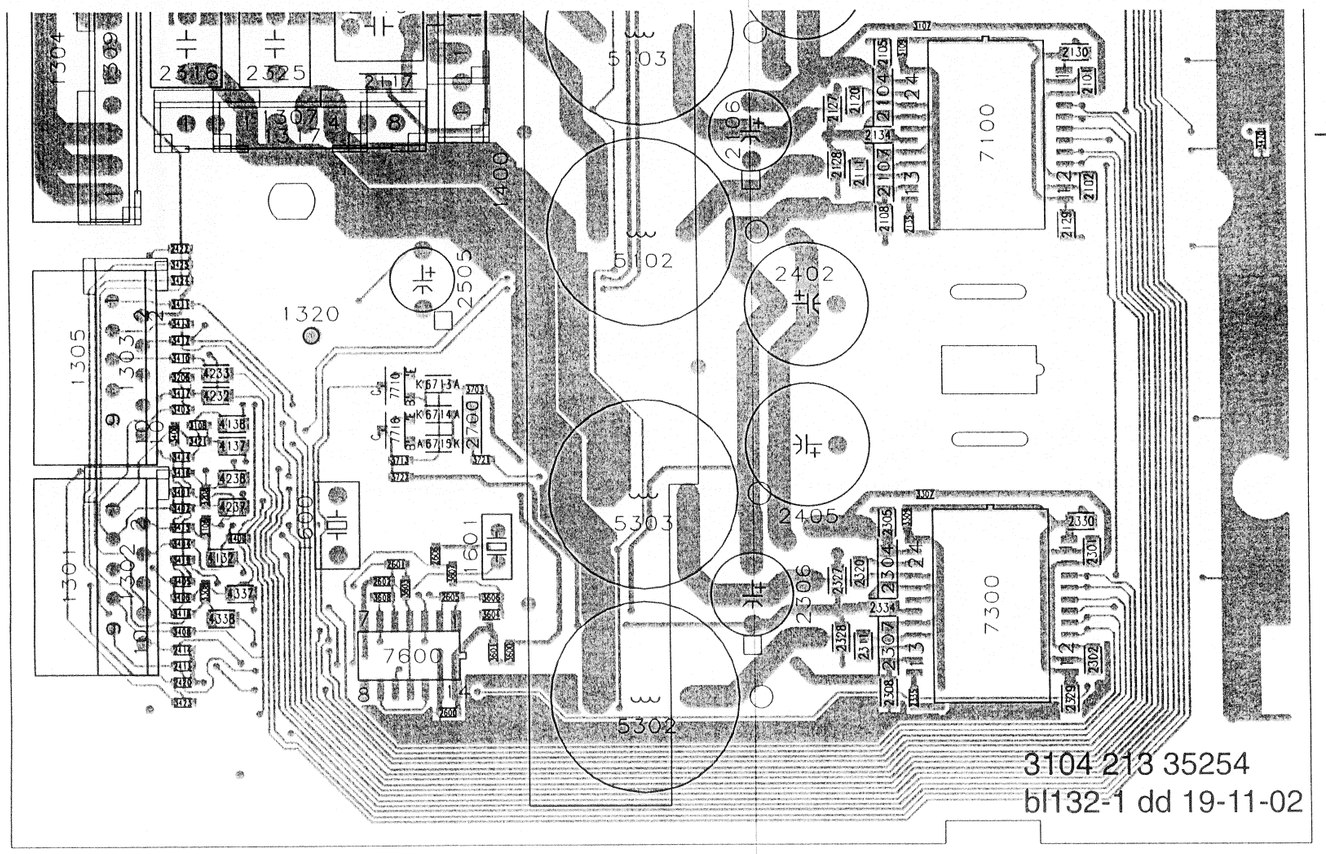

PART D

AMPLIFIER BOARD - BOTTOM VIEW PART A

This assembly drawing shows a summary of all possible versions. For components used in a specific version see schematics and respective parts list.

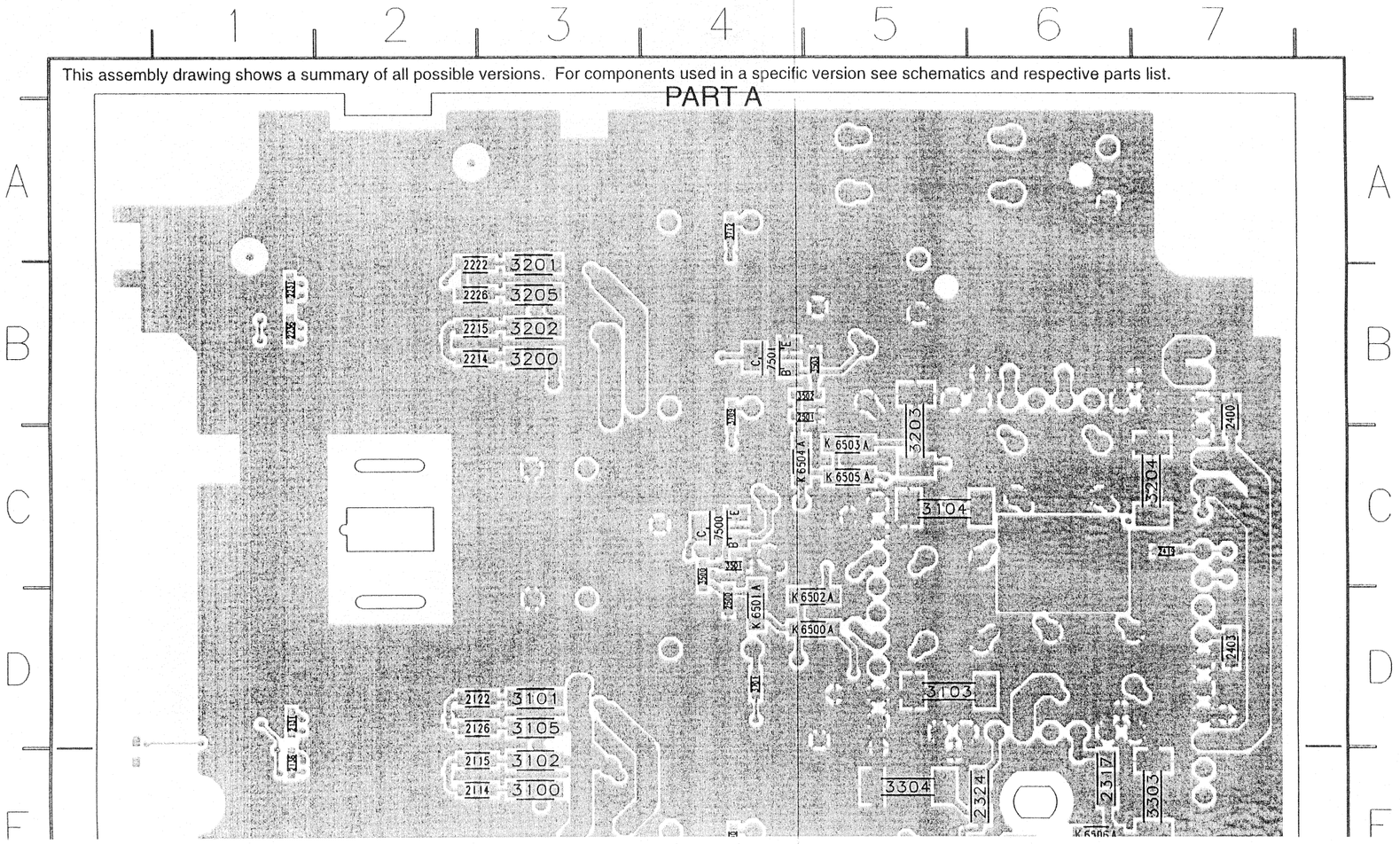

AMPLIFIER BOARD - BOTTOM VIEW PART B

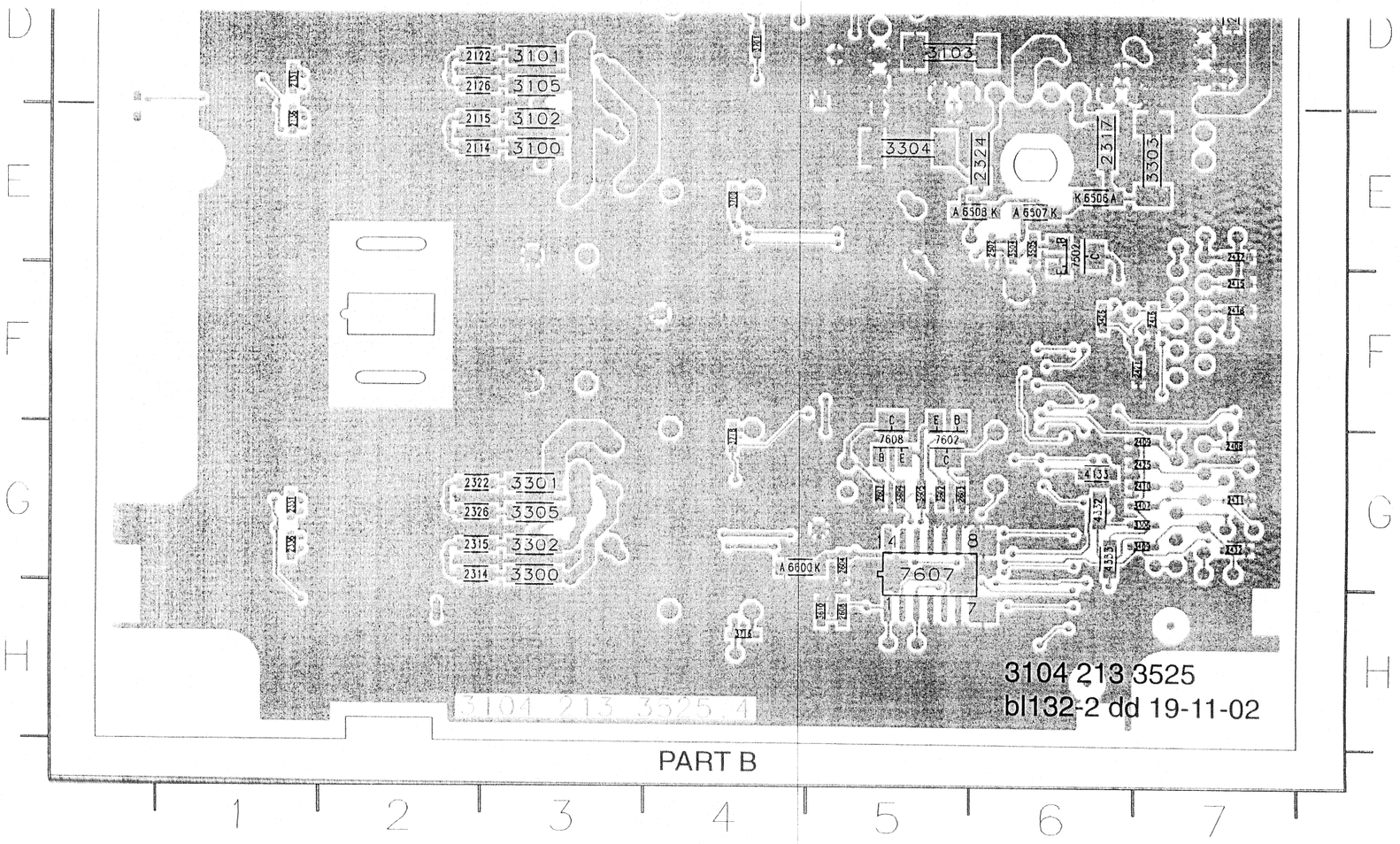

ELECTRICAL PARTS LIST - AMPLIFIER BOARD

MISCELLANEOUS

8	3104 211 29861	Spring, IC	
10	3104 211 02881	Earth Spring	
1301	4822 265 11208	Flex Conn. 10P	not for 75W
1302	4822 267 10729	Flex Conn. 10P	not for 100W
1303	4822 267 10729	Flex Conn. 10P	not for 100W
1600	2422 540 98514	Ceram Resonator 602,7kHz	
1601	2422 540 98568	Ceram Resonator 700kHz	

CAPACITORS

2101	2222 580 15649	100nF 10% 50V	
2102	2222 580 15649	100nF 10% 50V	
2104	2222 601 55649	100nF 10% 100V	
2105	2222 580 15649	100nF 10% 50V	
2106	2020 021 91431	22uF 20% 100V	
2107	2222 601 55649	100nF 10% 100V	
2108	2222 580 15649	100nF 10% 50V	
2111	4822 126 13188	15nF 5% 63V	
2114	5322 116 80853	560pF 5% 63V	
2115	5322 116 80853	560pF 5% 63V	
2116	4822 121 51252	470nF 5% 63V	
2117	2222 581 15654	220nF 10% 50V	
2120	4822 126 13188	15nF 5% 63V	
2122	5322 116 80853	560pF 5% 63V	
2124	2222 581 15654	220nF 10% 50V	
2125	4822 121 51252	470nF 5% 63V	
2126	5322 116 80853	560pF 5% 63V	
2127	2222 580 15649	100nF 10% 50V	
2128	2222 580 15649	100nF 10% 50V	
2129	2222 580 15649	100nF 10% 50V	
2130	2222 580 15649	100nF 10% 50V	
2131	4822 126 14241	330pF 50V	
2134	2238 780 55654	220nF 10% 16V	
2135	4822 126 13956	68pF 5% 63V	
2136	4822 126 14241	330pF 50V	
2201	2222 580 15649	100nF 10% 50V	
2202	2222 580 15649	100nF 10% 50V	
2204	2222 601 55649	100nF 10% 100V	
2205	2222 580 15649	100nF 10% 50V	
2206	2020 021 91431	22uF 20% 100V	
2207	2222 601 55649	100nF 10% 100V	
2208	2222 580 15649	100nF 10% 50V	
2211	4822 126 13188	15nF 5% 63V	
2214	5322 116 80853	560pF 5% 63V	
2215	5322 116 80853	560pF 5% 63V	
2216	4822 121 51252	470nF 5% 63V	
2217	2222 581 15654	220nF 10% 50V	
2220	4822 126 13188	15nF 5% 63V	
2222	5322 116 80853	560pF 5% 63V	
2224	2222 581 15654	220nF 10% 50V	
2225	4822 121 51252	470nF 5% 63V	
2226	5322 116 80853	560pF 5% 63V	
2227	2222 580 15649	100nF 10% 50V	
2228	2222 580 15649	100nF 10% 50V	
2229	2222 580 15649	100nF 10% 50V	
2230	2222 580 15649	100nF 10% 50V	
2231	4822 126 14241	330pF 50V	
2234	2238 780 55654	220nF 10% 16V	
2235	4822 126 13956	68pF 5% 63V	
2236	4822 126 14241	330pF 50V	
2301	2222 580 15649	100nF 10% 50V	
2302	2222 580 15649	100nF 10% 50V	
2304	2222 601 55649	100nF 10% 100V	
2305	2222 580 15649	100nF 10% 50V	
2306	2020 021 91431	22uF 20% 100V	
2307	2222 601 55649	100nF 10% 100V	
2308	2222 580 15649	100nF 10% 50V	
2311	4822 126 13188	15nF 5% 63V	
2314	5322 116 80853	560pF 5% 63V	
2315	5322 116 80853	560pF 5% 63V	
2316	4822 121 51252	470nF 5% 63V	
2317	2222 581 15654	220nF 10% 50V	
2320	4822 126 13188	15nF 5% 63V	
2322	5322 116 80853	560pF 5% 63V	
2324	2222 581 15654	220nF 10% 50V	
2325	4822 121 51252	470nF 5% 63V	
2326	5322 116 80853	560pF 5% 63V	
2327	2222 580 15649	100nF 10% 50V	
2328	2222 580 15649	100nF 10% 50V	
2329	2222 580 15649	100nF 10% 50V	
2330	2222 580 15649	100nF 10% 50V	
2331	4822 126 14241	330pF 50V	
2334	2238 780 55654	220nF 10% 16V	
2335	4822 126 13956	68pF 5% 63V	
2336	4822 126 14241	330pF 50V	
2400	2222 580 15649	100nF 10% 50V	
2401	4822 124 80062	470uF 20% 35V	
2402	4822 124 80062	470uF 20% 35V	
2403	2222 580 15649	100nF 10% 50V	
2404	4822 124 80062	470uF 20% 35V	
2405	4822 124 80062	470uF 20% 35V	
2406	4822 123 14026	470uF 20% 35V	
2407	4822 123 14026	470uF 20% 35V	
2408	5322 126 11578	1nF 10% 50V	
2409	5322 126 11578	1nF 10% 50V	
2410	5322 126 11578	1nF 10% 50V	
2411	5322 126 11578	1nF 10% 50V	
2412	5322 126 11578	1nF 10% 50V	
2413	5322 126 11578	1nF 10% 50V	
2414	5322 126 11578	1nF 10% 50V	
2415	5322 126 11578	1nF 10% 50V	not for 100W
2416	5322 126 11578	1nF 10% 50V	not for 100W
2417	5322 126 11578	1nF 10% 50V	not for 100W
2418	5322 126 11578	1nF 10% 50V	not for 100W
2419	2238 586 59812	100nF 50V	

8-23

ELECTRICAL PARTS LIST - AMPLIFIER BOARD

2420	5322 126 11578	1nF 10% 50V	
2421	5322 126 11578	1nF 10% 50V	not for 100W
2422	5322 126 11578	1nF 10% 50V	not for 100W
2423	2238 586 59812	100nF 50V	
2425	5322 126 11578	1nF 10% 50V	
2600	2238 586 59812	100nF 50V	
2602	2020 552 94427	100pF 5% 50V	
2603	2020 552 94427	100pF 5% 50V	
2604	2238 586 59812	100nF 50V	
2605	4822 126 13881	470pF 5% 50V	
2606	5322 126 11578	1nF 10% 50V	
2607	2020 552 94427	100pF 5% 50V	
2608	2020 552 94427	100pF 5% 50V	
2700	2020 552 96507	10uF +80/-20% 10V	

RESISTORS

3100	4822 051 10568	5R6 5% 0,25W	
3101	4822 051 10568	5R6 5% 0,25W	
3102	4822 051 10568	5R6 5% 0,25W	
3103	2322 762 60229	22R 5% PRC221	
3104	2322 762 60229	22R 5% PRC221	
3105	4822 051 10568	5R6 5% 0,25W	
3106	4822 117 12925	47k 1% 0,062W	not for 75W
3107	4822 051 30109	10R 5% 0,062W	
3108	4822 117 12925	47k 1% 0,062W	not for 75W
3109	4822 051 30109	10R 5% 0,062W	
3200	4822 051 10568	5R6 5% 0,25W	
3201	4822 051 10568	5R6 5% 0,25W	
3202	4822 051 10568	5R6 5% 0,25W	
3203	2322 762 60229	22R 5% PRC221	
3204	2322 762 60229	22R 5% PRC221	
3205	4822 051 10568	5R6 5% 0,25W	
3206	4822 117 12925	47k 1% 0,062W	not for 75W
3207	4822 051 30109	10R 5% 0,062W	
3208	4822 117 12925	47k 1% 0,062W	not for 75W
3209	4822 051 30109	10R 5% 0,062W	
3300	4822 051 10568	5R6 5% 0,25W	
3301	4822 051 10568	5R6 5% 0,25W	
3302	4822 051 10568	5R6 5% 0,25W	
3303	2322 762 60229	22R 5% PRC221	
3304	2322 762 60229	22R 5% PRC221	
3305	4822 051 10568	5R6 5% 0,25W	
3306	4822 117 12925	47k 1% 0,062W	not for 75W
3307	4822 051 30109	10R 5% 0,062W	
3308	4822 117 12925	47k 1% 0,062W	not for 75W
3309	4822 051 30109	10R 5% 0,062W	
3400	4822 051 30562	5k6 5% 0,063W	not for 75W
3401	4822 051 30562	5k6 5% 0,063W	not for 100W
3402	4822 051 30562	5k6 5% 0,063W	not for 75W
3403	4822 051 30562	5k6 5% 0,063W	not for 75W
3404	4822 051 30221	220R 5% 0,062W	
3405	4822 051 30562	5k6 5% 0,063W	not for 100W
3406	4822 051 30562	5k6 5% 0,063W	not for 75W
3407	4822 051 30562	5k6 5% 0,063W	not for 75W
3408	4822 051 30221	220R 5% 0,062W	not for 100W
3409	4822 051 30221	220R 5% 0,062W	not for 75W
3410	4822 051 30562	5k6 5% 0,063W	not for 100W
3411	4822 051 30562	5k6 5% 0,063W	not for 100W
3412	4822 051 30221	220R 5% 0,062W	not for 100W
3413	4822 051 30562	5k6 5% 0,063W	not for 100W
3414	4822 051 30562	5k6 5% 0,063W	
3415	4822 051 30562	5k6 5% 0,063W	
3416	4822 051 30562	5k6 5% 0,063W	not for 75W
3417	4822 051 30562	5k6 5% 0,063W	not for 75W
3418	4822 051 30562	5k6 5% 0,063W	not for 75W
3419	4822 051 30562	5k6 5% 0,063W	not for 75W
3420	2322 615 23103	NTC 10k 5% 0,125W	
3421	4822 051 30562	5k6 5% 0,063W	
3422	4822 051 30101	100R 5% 0,062W	
3423	4822 051 30562	5k6 5% 0,063W	not for 100W
3424	4822 051 30562	5k6 5% 0,063W	not for 100W
3425	4822 051 30562	5k6 5% 0,063W	not for 100W
3426	4822 051 30562	5k6 5% 0,063W	not for 100W
3600	4822 051 30222	2k2 5% 0,062W	
3601	4822 051 30222	2k2 5% 0,062W	
3602	4822 117 13632	100k 1% 0,062W	
3604	4822 051 30103	10k 5% 0,062W	
3605	4822 051 30682	6k8 5% 0,062W	
3606	4822 117 13632	100k 1% 0,062W	
3607	4822 051 30102	1k 5% 0,062W	
3608	4822 051 30105	1M 5% 0,062W	
3609	4822 117 13632	100k 1% 0,062W	
3610	4822 117 12139	22R 5% 0,062W	
3700	4822 117 12925	47k 1% 0,063W	
3701	4822 117 12925	47k 1% 0,063W	
3703	4822 117 12925	47k 1% 0,063W	
3709	4822 117 12925	47k 1% 0,063W	
3712	4822 117 12925	47k 1% 0,063W	
3713	4822 051 30103	10k 5% 0,062W	
3716	4822 117 12925	47k 1% 0,063W	
3718	4822 117 12925	47k 1% 0,063W	
3721	4822 051 30103	10k 5% 0,062W	
3722	4822 051 30103	10k 5% 0,062W	
4132	4822 051 20008	0R JUMPER 0805	
4133	4822 051 20008	0R JUMPER 0805	
4137	4822 051 20008	0R JUMPER 0805	
4138	4822 051 20008	0R JUMPER 0805	
4232	4822 051 20008	0R JUMPER 0805	
4233	4822 051 20008	0R JUMPER 0805	
4237	4822 051 20008	0R JUMPER 0805	
4238	4822 051 20008	0R JUMPER 0805	
4332	4822 051 20008	0R JUMPER 0805	
4333	4822 051 20008	0R JUMPER 0805	
4337	4822 051 20008	0R JUMPER 0805	

ELECTRICAL PARTS LIST - MAINS & ECO STBY, SUPPLY, SPEAKER (SPK I) & SW-OUT (SPK II) BOARDS

MISCELLANEOUS

	4822 492 11735	Spring, Transistor	
1200	4822 071 55002 ⚠	Fuse T5A 250V	75W
1200	4822 252 51123 ⚠	Fuse T6,3A 250V	100W
1203	4822 071 55002 ⚠	Fuse T5A 250V	75W
1203	4822 252 51123 ⚠	Fuse T6,3A 250V	100W
1204	9965 000 07786 ⚠	Fuse T4A 250V	
1205	9965 000 07786 ⚠	Fuse T4A 250V	
1263	4822 267 10733	Flex Socket 4P Vert,	
1270	2422 025 14044	Connector 6P	
1303	2422 015 19885	Speaker Socket 12P	Single SW
1304	2422 015 19887	Speaker Socket 10P	Twin SW
1305	2422 015 19886	Speaker Socket 4P	Twin SW
1901	4822 265 31015 ⚠	Mains Socket 2A5 250V	/21R/21S/22S/25S
1901	2422 030 00328 ⚠	Mains Socket 7A 125V	/37R
1905	4822 071 53152 ⚠	Fuse T3.15A 250V	MX5500D/21S
1905	9965 000 07788 ⚠	Fuse T2A 250V	MX5700D/22S/25S
1905	9965 000 07786 ⚠	Fuse T4A 250V	MX5700D/21R/21S
1905	4822 253 10126 ⚠	Fuse T4A 250V	/37
1907	4822 265 20723	Connector 2P	
1908	4822 267 10958	Flex Socket 5P Hort,	
1909	4822 267 10728	Connector 4P	/21R/21S
1910	2422 132 07519 ⚠	RELAY 1P 12V 16A OZ-SS L	
1911	9965 000 07789 ⚠	Voltage Selector	/21R/21S
1912	9965 000 07788 ⚠	Fuse T2A 250V	/21R/21S

CAPACITORS

2000	5322 126 11583	10nF 10% 50V	
2001	5322 126 11583	10nF 10% 50V	
2002	5322 126 11583	10nF 10% 50V	
2003	5322 126 11583	10nF 10% 50V	
2004	5322 126 11583	10nF 10% 50V	
2005	5322 126 11583	10nF 10% 50V	
2006	5322 126 11583	10nF 10% 50V	
2007	5322 126 11583	10nF 10% 50V	
2008	5322 126 11583	10nF 10% 50V	
2009	5322 126 11583	10nF 10% 50V	
2010	5322 126 11583	10nF 10% 50V	
2011	5322 126 11583	10nF 10% 50V	
2019	5322 126 11583	10nF 10% 50V	Twin SW
2020	5322 126 11583	10nF 10% 50V	Twin SW
2021	5322 126 11583	10nF 10% 50V	Twin SW
2022	5322 126 11583	10nF 10% 50V	Twin SW
2200	4822 126 12785	47nF 50V	
2201	5322 124 40641	10uF 20% 100V	
2202	4822 124 80231	47uF 20% 16V	
2203	5322 121 42578	100nF 5% 250V	
2204	5322 121 42578	100nF 5% 250V	
2205	5322 121 42578	100nF 5% 250V	
2206	4822 124 80563	4700uF 20% 35V	
2207	4822 124 80563	4700uF 20% 35V	
2208	5322 121 42661	330nF 5% 63V	
2209	5322 121 42578	100nF 5% 250V	
2211	4822 124 80563	4700uF 20% 35V	
2212	5322 121 42386	100nF 5% 63V	
2213	5322 121 42578	100nF 5% 250V	
2215	2020 012 93745	10mF 20% 16V	
2217	2020 561 90365	100nF +80/-20% 50V	
2218	4822 124 11947	10uF 20% 16V	
2219	4822 124 81286	47uF 20% 16V	
2220	4822 124 81286	47uF 20% 16V	
2222	4822 124 12056	1000uF 20% 35V	
2223	4822 124 12056	1000uF 20% 35V	
2224	4822 124 41643	100uF 20% 16V	
2225	4822 124 41643	100uF 20% 16V	
2901	2238 586 59812	100nF +80/-20% 50V	
2902	4822 121 43526	47nF 5% 250V	
2903	3198 017 34730	47nF 16V	
2904	2238 586 59812	100nF +80/-20% 50V	
2905	5322 126 11583	10nF 10% 50V	
2906	2222 336 19106	22nF 20% 275V	
2907	4822 124 40255	100uF 20% 63V	
2908	4822 121 10512	220nF 20% 275V	/22S/25S
2909	5322 126 11583	10nF 10% 50V	
2910	2238 586 59812	100nF +80/-20% 50V	/22S/25S
2911	4822 124 41584	100uF 20% 10V	
2912	4822 124 40207	100uF 20% 25V	
2913	2222 338 22474	470nF 20% 275V	/21R/21S/37
2914	4822 126 13193	4,7nF 10% 63V	
2915	2020 554 90173 ⚠	2,2nF 20% 250V	

RESISTORS

3200	4822 116 52283	4k7 5% 0,5W	
3201	4822 051 30272	2k7 5% 0,062W	
3202	4822 051 30103	10k 5% 0,062W	
3203	4822 051 30103	10k 5% 0,062W	
3204	4822 117 12925	47k 1% 0,063W	
3205	4822 051 30103	10k 5% 0,062W	
3206	4822 051 30681	680R 5% 0,062W	
3207	4822 051 30331	330R 5% 0,062W	
3208	4822 051 30681	680R 5% 0,062W	
3209	4822 051 30472	4k7 5% 0,062W	
3216	4822 051 30331	330R 5% 0,062W	
3217	4822 051 30682	6k8 5% 0,062W	
3218	4822 051 30153	15k 5% 0,062W	
3219	4822 051 30102	1k 5% 0,062W	
3222	4822 051 30102	1k 5% 0,062W	
3223	4822 117 13632	100k 1% 0,62W	
3224	4822 116 83872	220R 5% 0,5W	
3225	4822 052 10828	8R2 5% 0,33W	
3226	4822 051 30471	470R 5% 0,062W	
3227	4822 051 30102	1k 5% 0,062W	
3229	4822 051 30472	4k7 5% 0,062W	
3901	4822 053 21106 ⚠	10M 5% 0,5W	/37
3902	4822 051 30103	10k 5% 0,062W	

8-22

ELECTRICAL PARTS LIST - MAINS & ECO STBY, SUPPLY, SPEAKER (SPK I) & SW-OUT (SPK II) BOARDS

3903	4822 051 30475	4M7 5% 0,062W
3904	4822 051 30331	330R 5% 0,062W
3905	4822 051 30681	680R 5% 0,062W
3906	4822 117 13632	100k 1% 0,62W
3907	4822 051 30333	33k 5% 0,062W
3908	4822 051 30105	1M 5% 0,062W
3909	4822 051 30471	470R 5% 0,062W
3910	4822 051 30222	2k2 5% 0,062W
3911	4822 117 13632	100k 1% 0,62W
3913	4822 117 12925	47k 1% 0,063W
3914	4822 117 12925	47k 1% 0,063W
3915	4822 053 21106	10M 5% 0,5W
3916	4822 051 30334	330k 5% 0,062W
3917	4822 116 52175	100R 5% 0,5W
3918	4822 116 52175	100R 5% 0,5W
3919	4822 051 30152	1k5 5% 0,062W
3920	4822 051 30472	4k7 5% 0,062W
4210	4822 051 30008	0R Jumper 0603
4211	4822 051 30008	0R Jumper 0603
4212	4822 051 30008	0R Jumper 0603

COILS & FILTERS

5901	4822 157 11832 ⚠	Mains Filter 400uH 3A
5902	4822 157 53473	Coil 1000uH 10%
5903	4822 157 53473	Coil 1000uH 10%
5904	4822 157 11228	Coil 100uH 5%
5905	2422 549 45157	Standby Transformer

DIODES

6200	4822 130 30621	1N4148
6201	3198 010 52790	BZX79-B27
6202	4822 130 31878	1N4003G
6203	4822 130 34382	BZX79-B8V2
6205	3198 010 52790	BZX79-B27
6208	4822 130 11397	BAS316
6209	4822 130 11397	BAS316
6211	4822 130 11139	GBU8D
6212	3198 010 10640	GBU4K
6214	4822 130 30621	1N4148
6215	4822 130 34174	BZX79-B4V7
6216	4822 130 34145	BZX79-B39
6901	4822 130 31878	1N4003G
6902	4822 130 31878	1N4003G
6903	4822 130 11397	BAS316
6904	4822 130 11397	BAS316
6905	4822 130 11397	BAS316
6906	4822 130 31878	1N4003G
6907	4822 130 11397	BAS316
6908	4822 130 30621	1N4148
6909	4822 130 11397	BAS316
6910	4822 130 11397	BAS316
6911	4822 130 11397	BAS316
6912	4822 130 31878	1N4003G
6914	4822 130 11397	BAS316
6915	4822 130 34173	BZX79-C5V6
6916	4822 130 31878	1N4003G
6917	4822 130 34145	BZX79-B39
6918	4822 130 11397	BAS316
6919	4822 130 11397	BAS316
6920	4822 130 11397	BAS316
6921	4822 130 11397	BAS316

TRANSISTORS & INTEGRATED CIRCUITS

7200	9340 561 95127	BUK7535-55A
7202	9340 561 95127	BUK7535-55A
7203	5322 130 60159	BC847B
7205	4822 130 60373	BC857B
7206	4822 130 60373	BC857B
7207	5322 130 60159	BC847B
7208	4822 209 33575	L7812CP
7209	4822 209 12335	L4941
7210	4822 130 41246	BC327-25
7901	4822 130 60373	BC857B
7902	4822 130 40855	BC337-40
7904	4822 130 42615	BC817-40
7905	4822 130 41327	BC327-40
7906	4822 130 42804	BC817-25

Note: Only the parts mentioned in this list are normal service spare parts.

8-24

ELECTRICAL PARTS LIST - AMPLIFIER BOARD

RESISTORS

4338	4822 051 20008	0R JUMPER 0805	
4400	4822 051 30008	0R JUMPER 0603	not for 75W

COILS & FILTERS

5102	2422 536 00496	IND. FXD. 22uH 10%
5103	2422 536 00496	IND. FXD. 22uH 10%
5202	2422 536 00496	IND. FXD. 22uH 10%
5203	2422 536 00496	IND. FXD. 22uH 10%
5302	2422 536 00496	IND. FXD. 22uH 10%
5303	2422 536 00496	IND. FXD. 22uH 10%
5400	4822 157 11411	FXD. IND. BEAD 100MHZ 80R
5401	4822 157 11411	FXD. IND. BEAD 100MHZ 80R

DIODES

6600	3198 020 55680	BZX384-C5V6
6713	4822 130 11397	BAS316
6714	4822 130 11397	BAS316
6715	4822 130 11397	BAS316

TRANSISTORS & INTEGRATED CIRCUITS

7100	9352 705 74518	TDA8920TH/N1R
7200	9352 705 74518	TDA8920TH/N1R
7300	9352 705 74518	TDA8920TH/N1R
7600	5322 209 11517	PC74HCU04T
7602	5322 130 60159	BC847B
7607	5322 209 14477	HEF4013BT
7608	4822 130 60373	BC857B
7710	5322 130 60159	BC847B
7716	4822 130 60373	BC857B

Note: Only the parts mentioned in this list are normal service spare parts.

AV BOARD

TABLE OF CONTENTS

Brief Introduction of the AV Board 12-1
Inputs, Source Sel. & Vol cont. L/R Circuit 12-2
HP amp / Pre-amp., Supply & Interconnection Circuit 12-3
Volume cont. Surr L/R, Cen & SW & Multiplexer Circuit 12-4
Digital in/out, S-video, Scart, & I²C Expander Circuit 12-5
Bottom view - Chip & Discrete layouts (Part A to D) 12-6
Top view - Component & Chip layouts (Part E to H) 12-7
Bottom view Part A 12-8
Bottom view Part B 12-9
Bottom view Part C 12-10
Bottom view Part D 12-11
Top view Part E 12-12
Top view Part F 12-13
Top view Part G 12-14
Top view Part H 12-15
Electrical parts list 12-16

BRIEF INTRODUCTION OF THE AV BOARD

The AV Board consists of the following features :

a. IC 7130 (TDA7468D)

IC 7130 provides the source selection (TUNER, TV/AV Digital in, DVD/CD & AUX) and basic sound processing - bass, treble, volume & mute controls for the Front L/R loudspeakers.

Note: Although provided for, the AUX source (pin 3 and 26) are never selected & instead and additional IC 7422 (HEF4052BT) is used to include a TV in from the Scart connector socket.

Sound features are controlled by the microprocessor IC on the Front Board via I²C Bus.

Undesirable noise during source switching are muted off via the software of the microprocessor IC on the Front Board.

b. IC 7422 (HEF4052BT)

This IC allows the additon of another TV source via the SCART connector socket. The output MUX_L/MUX_R will go to pin 4 and 25 of IC 7130.

c. Line out mute

Line out mute is done via the transistors 7100, 7132, 7133 and 7150 during Power up/down, Source and sound switching (MUTE-LO, active low) and Disc & Digital in modes (MUTE_AV, active high).

d. Headphone amplifier / pre-amplifier

IC 7230 (NJM4556AM) is used as headphone amplifer and pre-amplification for the Front L/R signal to the Amplifier board. The transistors matrix 7200, 7231, 7232, 7233 and 7250 allows the heaphone out to be muted when inserting the headphone

e. IC 7304 and 7330 (TDA7468D)

IC 7304 and 7330 provides creation of matrix sound (via Line-L/R from IC 7130) during non-DVD source and sound processing - bass, treble, volume & mute controls for the Center/Subwoofer and Surround L/R loudspeakers respectively.

Sound features are controlled by the microprocessor IC on the Front Board via I²C Bus.

Undesirable noise during source switching are muted off via the software of the microprocessor IC on the Front Board.

f. IC 7352 (74HC4051D)

This multiplexer output (MUX_DET) informs the microprocess IC on the Front Board on the type of connection & condition the set is in.

g. IC 7402 (M62320FP)

The IC serves as I²C Expander to provide for additional control lines required.

9-2

INPUT, SOURCE SELECT & VOLUME CONTROL L/R CIRCUIT

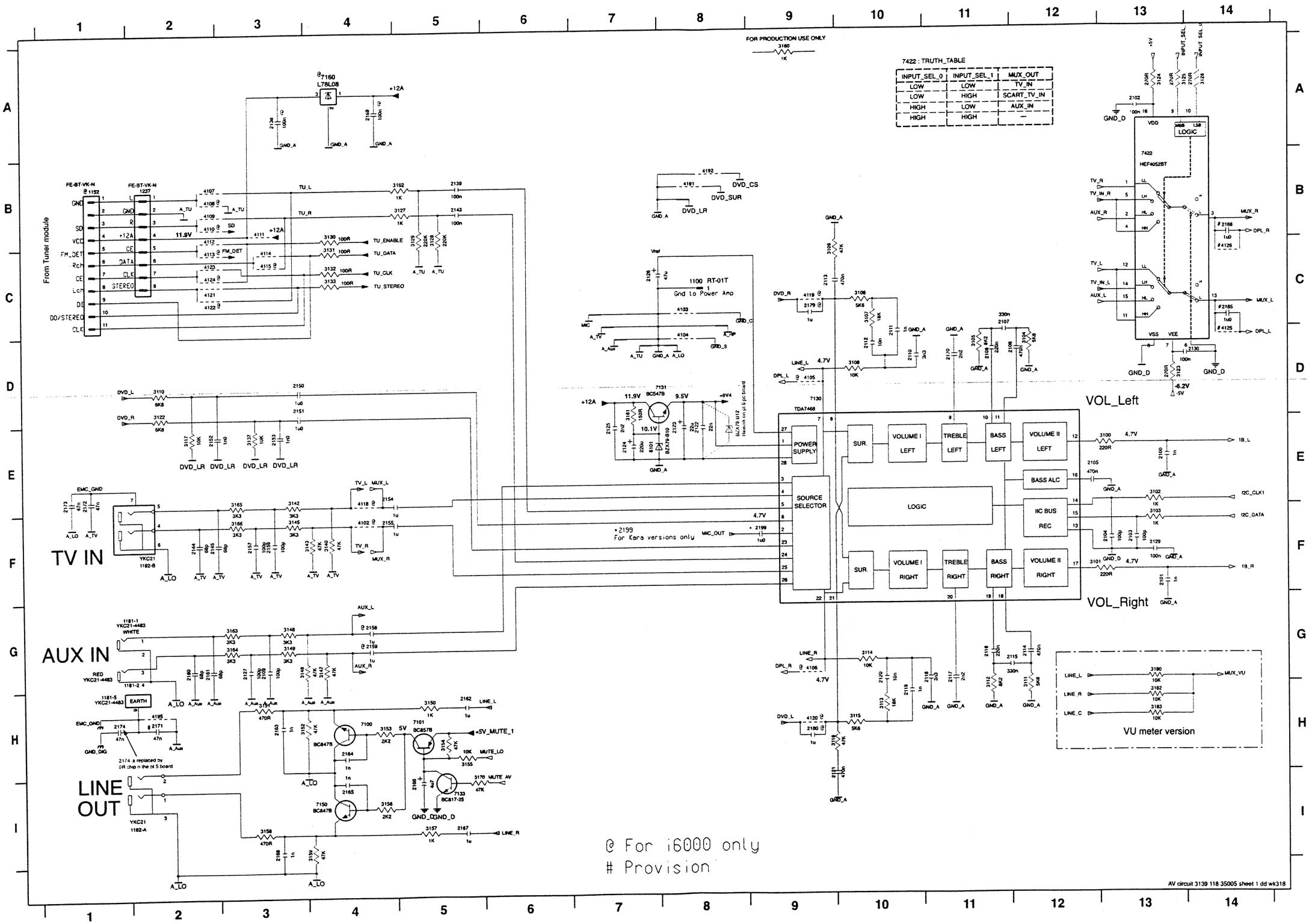

1100 C8	3154 H5
1152 B1	3155 H5
1181-1 G2	3156 I4
1181-2 G2	3157 I5
1181-5 H1	3158 I3
1182-A I2	3159 I4
1182-B F2	3160 A9
1237 B2	3161 D7
2100 E13	3162 B5
2101 F13	3163 G3
2102 A13	3164 G3
2103 F13	3165 E3
2104 F13	3166 F3
2105 E12	3170 I5
2106 D11	3180 G13
2107 C11	3182 H13
2108 D11	3183 H13
2109 G3	4102 F4
2110 D10	4103 C8
2111 D10	4104 D8
2112 D10	4105 D9
2113 C9	4106 G9
2114 G12	4107 B2
2115 G12	4108 B2
2116 G11	4109 B2
2117 G11	4110 B2
2118 G11	4111 B3
2119 H10	4112 B2
2120 G10	4113 C2
2121 I9	4114 C3
2122 E8	4115 C3
2123 E8	4118 E4
2124 E7	4119 C9
2125 E7	4120 H9
2126 C7	4121 C2
2127 G3	4122 C2
2129 F13	4123 C2
2130 D14	4124 C2
2136 A3	4125 D14
2139 B5	4126 C14
2143 B5	4191 B8
2144 F2	4192 B8
2145 F2	4195 H2
2150 D3	5101 E7
2151 D3	7100 H4
2152 E2	7101 H5
2153 E3	7131 D7
2154 E4	7133 I5
2155 F4	7150 I4
2156 F3	7160 A4
2157 F3	
2158 G4	
2159 G4	
2160 G2	
2161 G2	
2162 H5	
2163 H3	
2164 H4	
2165 I4	
2166 I5	
2167 I5	
2168 I3	
2169 A4	
2170 D11	
2171 H2	
2172 E1	
2173 E1	
2174 H1	
2179 C9	
2180 H9	
2185 C14	
2186 B14	
2199 F9	
3100 E13	
3101 F12	
3102 E13	
3103 F13	
3104 D12	
3105 D11	
3106 C10	
3107 C10	
3108 D10	
3109 C9	
3110 D2	
3111 H12	
3112 H11	
3113 H10	
3114 G10	
3115 H10	
3116 H9	
3117 E2	
3122 D2	
3123 D13	
3124 A13	
3125 A13	
3126 A14	
3127 B5	
3128 B5	
3129 B5	
3130 B4	
3131 C4	
3132 C4	
3133 C4	
3137 E3	
3140 F4	
3142 E3	
3143 F4	
3145 F3	
3146 G3	
3147 G4	
3148 G3	
3149 G3	
3150 H5	
3151 H3	
3152 H3	
3153 H4	

9-3

PRE-AMPLIFIER, SUPPLY & INTERCONNECTION CIRCUIT

1200 E9	1233 E9	1240 D12	1245 D13	2208 F3	2213 C1	2218 G1	2226 G5	2231 H9	2242 E6	2283 D8	3204 B7	3209 A5	3214 B4	3231 D2	3236 E1	3243 H2	3254 G7	3261 G6	3269 G7	3274 E5	3291 A10	4204 H13	4209 A9	5232 F3	6204 H1	6226 H2	7205 G2	7210 G5	7233 A7
1201 E9	1235 A11	1241 A12	1246 A12	2209 D2	2214 D2	2219 G2	2227 F8	2232 G8	2254 G7	3200 A2	3205 A6	3210 B5	3215 H7	3232 F1	3237 C1	3244 H2	3256 B2	3262 H9	3270 D9	3275 E5	4200 F12	4205 A12	4280 C8	6200 A2	6205 F7	6227 E5	7206 G9	7211 H7	7250 B4
1230 B9	1236 B10	1242 A13	2201 A1	2210 E2	2215 C1	2220 G3	2228 H2	2233 C2	2280 D8	3201 A2	3206 A6	3211 A4	3224 D8	3233 D1	3238 F3	3245 G9	3257 C2	3263 H9	3271 D9	3276 E5	4201 F12	4206 A12	4281 D8	6201 A2	6223 G5	6228 E5	7207 H9	7230 D3	7252 E5
1231 D10	1238 G12	1243 B9	2202 B6	2211 D2	2216 F2	2224 G6	2229 H1	2240 H5	2281 D8	3202 H6	3207 A5	3212 B4	3225 D8	3234 F1	3239 H7	3250 H9	3259 G5	3265 G5	3272 E5	3277 E5	4202 F13	4207 A12	5201 H6	6202 H6	6224 G5	7200 A4	7208 F7	7231 A5	7253 E6
1232 C10	1239 D12	1244 G12	2207 D3	2212 F2	2217 F1	2225 G5	2230 H2	2241 H6	2282 C8	3203 B7	3208 B5	3213 A4	3230 E2	3235 D1	3240 H5	3252 F7	3260 H9	3268 H9	3273 E6	3290 A10	4203 F13	4208 A12	5202 G6	6203 H6	6225 F7	7204 F5	7209 G7	7232 A6	9291 A10

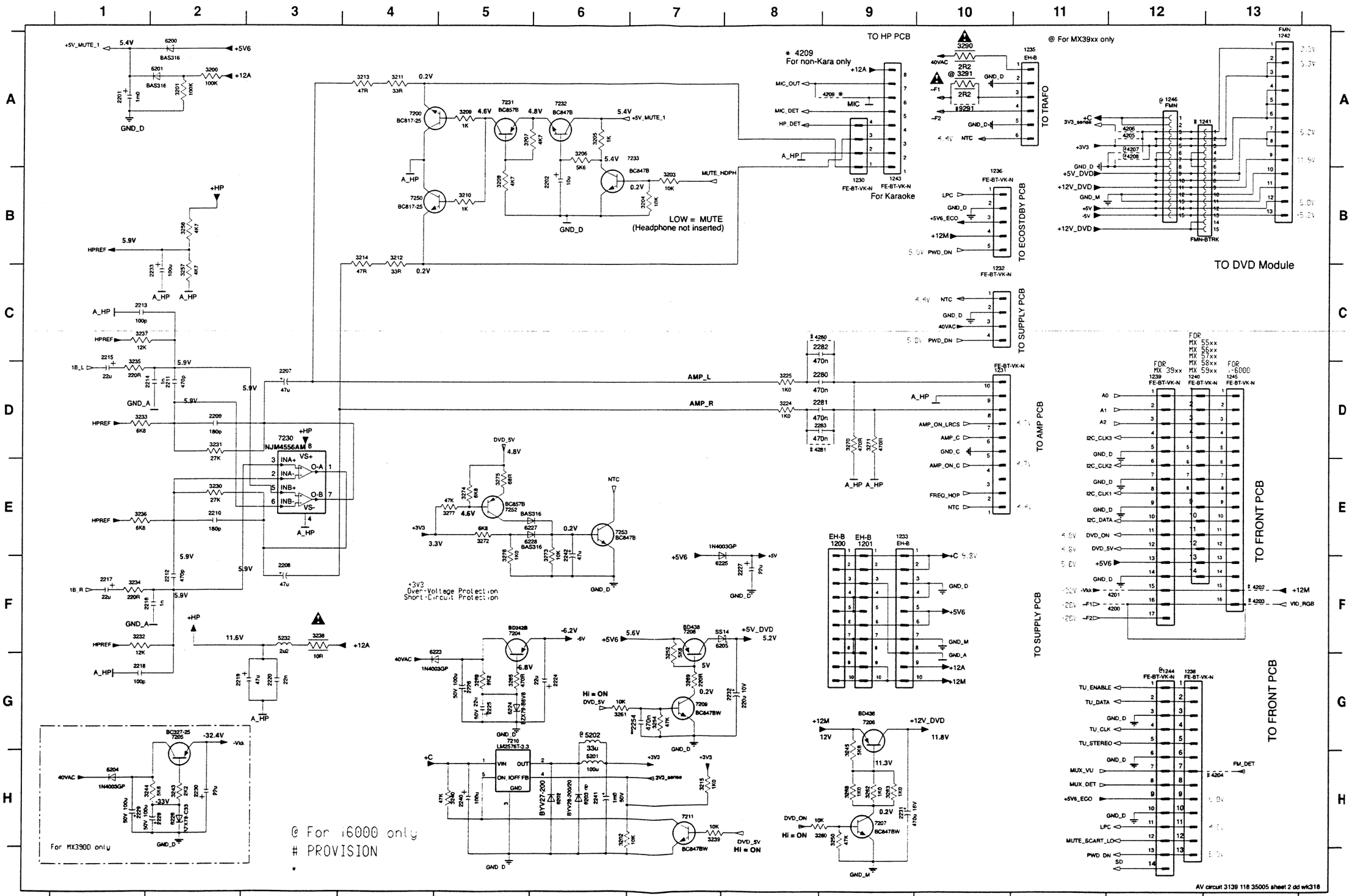

9-4

VOLUME CONTROL SURR., CENTER & SW AND CONTROL MULTIPLEXER CIRCUIT

1234 E11	2303 C8	2308 D7	2311 B3	2314 C3	2320 C1	2324 F9	2327 G7	2330 G7	2333 H6	2336 F3	2339 G3	2342 G1	2349 A13	2380 G8	3302 G8	3305 B7	3308 D8	3312 A3	3315 C2	3318 C1	3321 C1	3325 F9	3328 G8	3334 G2	3337 E2	3340 F1	3343 G1	3349 H6	3357 C11	3369 B13	4342 E1
2128 C7	2304 B7	2309 A5	2312 B3	2318 F8	2321 D1	2325 F7	2328 G7	2331 E5	2334 H6	2337 F3	2340 C7	2343 G1	2352 C8	2381 G8	3303 G7	3306 C8	3310 B6	3313 B2	3316 D2	3319 C1	3322 F7	3326 F8	3329 F8	3335 H2	3338 F2	3341 G2	3344 G1	3355 C11	3359 B11	3370 C13	7301 F8
2302 B8	2305 B7	2310 D5	2313 B2	2319 C1	2322 D1	2326 F7	2329 G8	2332 H6	2335 H5	2338 F2	2341 F1	2344 H1	2353 G8	3135 H6	3304 B8	3307 C8	3311 D6	3314 C2	3317 D2	3320 C1	3324 F10	3327 F8	3333 E6	3336 C7	3339 G2	3342 G2	3347 F1	3356 A13	3368 B13	4341 B1	7302 F9

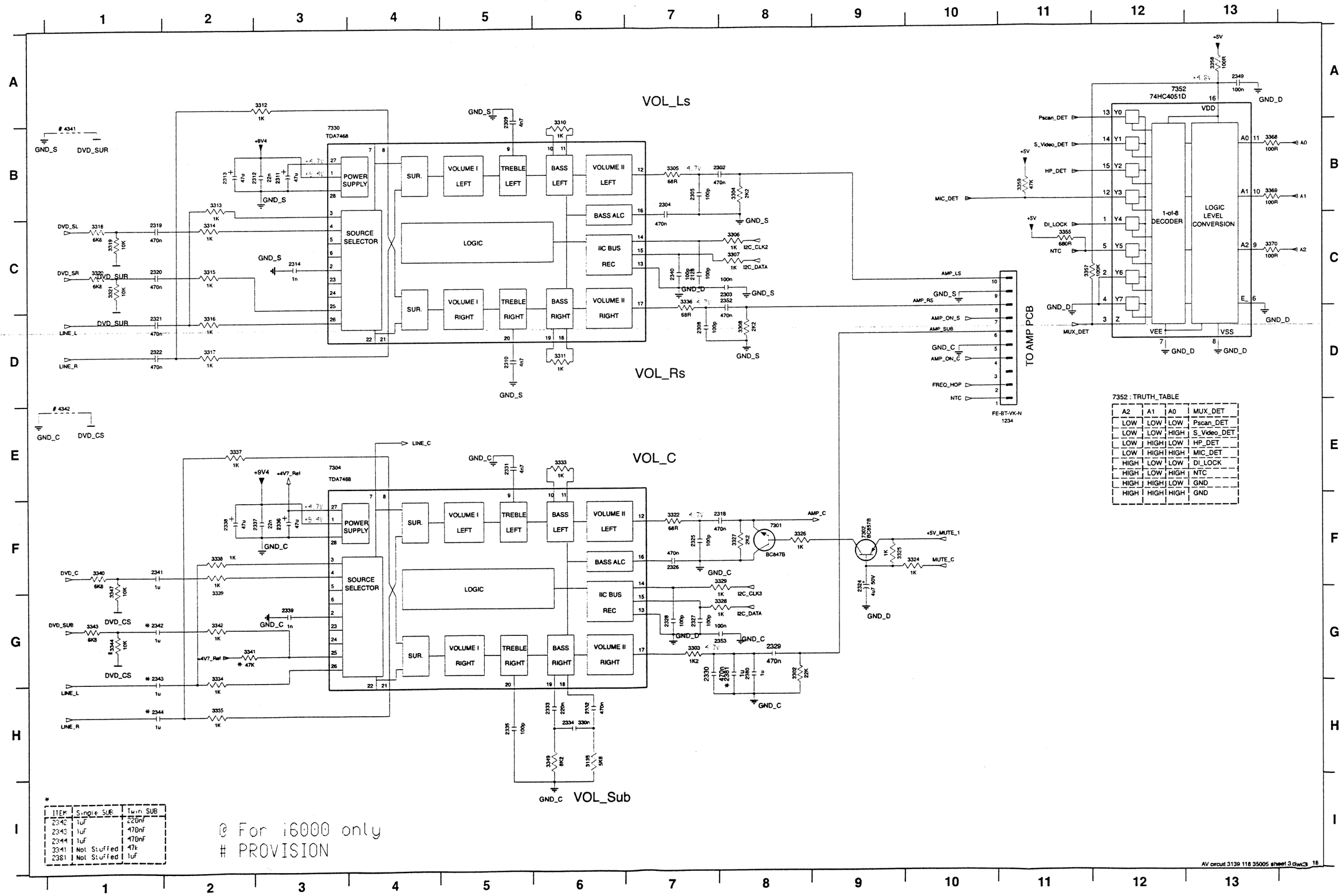

7352 : TRUTH_TABLE

A2	A1	A0	MUX_DET
LOW	LOW	LOW	Pscan_DET
LOW	LOW	HIGH	S_Video_DET
LOW	HIGH	LOW	HP_DET
LOW	HIGH	HIGH	MIC_DET
HIGH	LOW	LOW	DI_LOCK
HIGH	LOW	HIGH	NTC
HIGH	HIGH	LOW	GND
HIGH	HIGH	HIGH	GND

*

ITEM	Single SUB	Twin SUB
2342	1uF	220nF
2343	1uF	470nF
2344	1uF	470nF
3341	Not Stuffed	47k
2381	Not Stuffed	1uF

9-5

DIGITAL I/O, S-VIDEO, SCART, & I²C EXPANDER CIRCUITS

1181-3 G1	1401 A1	2403 D12	2412 F13	2421 I6	2428 G3	2435 A9	3405 B11	3418 I10	3426 F12	3434 E8	3444 G2	3451 C3	3459 E4	3466 B8	4116 H13	4406 E8	4413 B13	4421 C6	4430 B12	5405 D9	6404 B13	7405 E7	7431 D11
1181-4 H1	1404 A2	2404 D12	2413 F12	2422 I5	2429 H2	2436 B9	3411 B3	3419 I10	3427 E12	3435 F9	3445 I2	3452 C4	3460 A7	3467 A9	4400 H2	4407 E10	4414 B13	4422 C6	4433 C12	5406 I9	6405 B13	7406 E9	7451 D4
1183-A G13	1405 E2	2407 H14	2414 A10	2423 H1	2430 B8	3400 A12	3413 C12	3420 I9	3428 E12	3436 C12	3446 H2	3454 C3	3461 B7	3468 B9	4401 G3	4408 D9	4415 F8	4424 G11	4436 C12	5407 E10	6406 B13	7407 E11	7452 E4
1183-B H13	1406 E1	2408 H13	2415 B10	2424 G3	2431 A7	3401 B12	3414 C12	3421 C4	3430 B12	3437 E10	3447 F9	3455 C4	3462 A7	3472 H5	4402 E6	4409 I9	4416 H8	4425 G11	5401 G3	5408 F9	6407 B13	7410 I10	7454 B7
1184 F13	2400 A11	2409 G12	2417 A4	2425 H2	2432 B7	3402 A11	3415 D10	3422 C4	3431 E6	3438 F11	3448 G10	3456 D4	3463 A8	3473 G6	4403 E9	4410 I9	4418 F9	4426 F12	5402 G2	5409 H9	6408 C13	7411 D10	7455 A8
1186 A12	2401 B12	2410 G12	2418 A4	2426 H3	2433 A9	3403 A11	3416 D9	3424 G11	3432 F6	3441 A3	3449 H9	3457 E4	3464 B8	3474 G13	4404 E11	4411 F9	4419 G9	4427 F12	5403 E6	6402 A13	6409 D13	7421 H10	7456 B9
1187 G6	2402 B4	2411 F13	2420 H5	2427 I2	2434 B9	3404 B11	3417 D10	3425 G11	3433 C12	3442 A4	3450 H10	3458 E4	3465 A8	3480 I5	4405 E6	4412 G9	4420 C11	4428 E12	5404 E8	6403 A13	7132 A8	7423 F10	

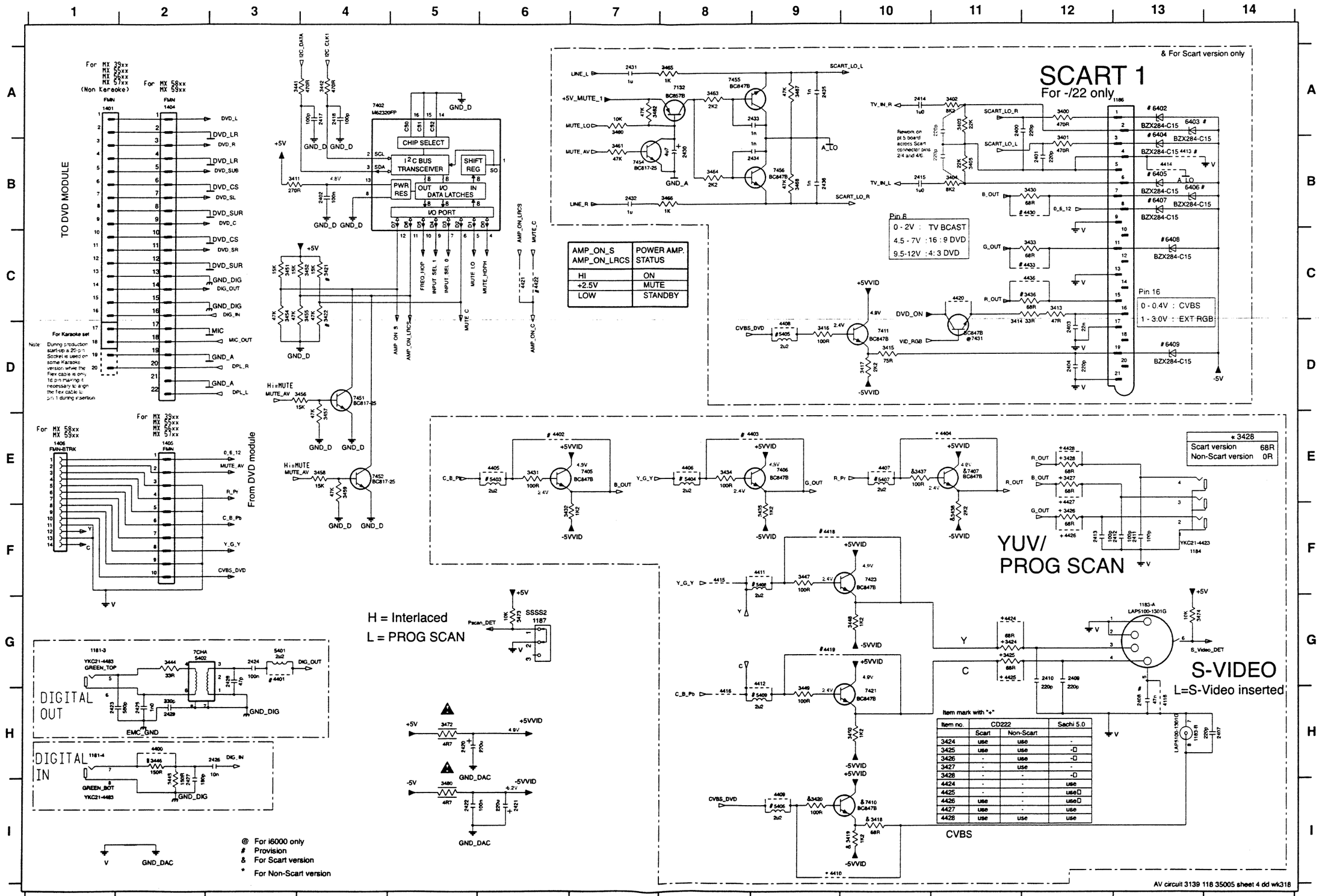

9-6

BOTTOM VIEW - SMD & COMPONENT

2100	C5	2145	D6	2304	C7	2349	A5	3101	C5	3145	D6	3210	B8	3308	C8	3343	C4	3426	D4	4109	A4	4341	C7	4436	D2	4545	A5	6408	D2
2101	C5	2150	C3	2305	C8	2352	C5	3102	C5	3146	D7	3211	B8	3310	D7	3344	C5	3427	D4	4110	A6	4342	C5	4500	A8	4546	A5	6409	D3
2103	B5	2151	C3	2308	C8	2353	C5	3103	B5	3147	D7	3212	B8	3311	C7	3347	C5	3428	D4	4111	A5	4400	D8	4501	A8	4547	B4	7130	C4
2104	C5	2153	C3	2309	D7	2380	D5	3104	C4	3148	D6	3213	B8	3312	C7	3349	B5	3430	D1	4112	A5	4402	D1	4502	A8	4548	B5	7133	C6
2105	B4	2154	C3	2310	D7	2381	D5	3105	C4	3149	D7	3214	B8	3313	C7	3355	A5	3431	D1	4113	A4	4403	D2	4503	A8	4549	A6	7200	B8
2106	C4	2156	D6	2313	D7	2400	D5	3106	C4	3150	D5	3215	B8	3314	C7	3356	A5	3432	D1	4114	A4	4404	D2	4504	A8	4556	D3	7207	C2
2107	C4	2157	D6	2314	D7	2401	D2	3107	C4	3151	D5	3224	B8	3315	C7	3357	A5	3433	D2	4115	A4	4405	D1	4505	A7	4557	D1	7209	C2
2108	C4	2160	D7	2318	C6	2402	A7	3108	C4	3152	D5	3225	B8	3316	C7	3359	A6	3434	D2	4116	D5	4406	D1	4506	A7	4561	C5	7231	B7
2109	D7	2161	D7	2319	C7	2403	D2	3109	C4	3154	D6	3243	A7	3317	C7	3368	A6	3435	D2	4119	C3	4407	D2	4507	B8	4564	C1	7232	B7
2110	C4	2162	D5	2320	C7	2404	D3	3110	C3	3157	D5	3244	A7	3318	C6	3369	A6	3436	D2	4120	B4	4408	C1	4508	C8	4565	B7	7233	B7
2111	C4	2163	D5	2321	D7	2407	D5	3111	B4	3158	D6	3245	D3	3319	C6	3370	A6	3437	D2	4121	A4	4409	C1	4510	C6	4579	B3	7250	B8
2112	C4	2164	D5	2322	D7	2408	D5	3112	B4	3159	D5	3250	C2	3320	C6	3400	D1	3438	C2	4122	A5	4410	C1	4511	C6	4585	D5	7302	B7
2113	B4	2167	D5	2325	C6	2409	D2	3113	B4	3160	D5	3252	C3	3321	C6	3401	D2	3441	A6	4123	A4	4411	C1	4512	A6	4593	A5	7304	C6
2114	B4	2168	D5	2326	C6	2410	D5	3114	B4	3161	B5	3254	C3	3322	B7	3402	D1	3442	A7	4124	A4	4412	C1	4513	A5	4596	C3	7330	C7
2115	B4	2169	D5	2327	C6	2411	D5	3115	B4	3162	B5	3259	B5	3323	B7	3403	D1	3444	D7	4191	C6	4413	C5	4514	A5	5403	C1	7352	A6
2116	B4	2170	C4	2328	C6	2412	D4	3116	B4	3163	D6	3260	D3	3325	B7	3404	D1	3445	D7	4192	C3	4414	C5	4515	A5	5404	D1	7405	D1
2117	B4	2171	D7	2329	D8	2413	D4	3117	C3	3164	D7	3261	C2	3326	B7	3405	D1	3446	D8	4195	D7	4415	B1	4516	B5	5405	C1	7406	D2
2118	B4	2172	D6	2330	D8	2414	D1	3122	C3	3165	D6	3262	D2	3327	C6	3411	A7	3447	C1	4198	D6	4416	C1	4517	B5	5406	C1	7407	D2
2119	B4	2173	D6	2331	C6	2415	D1	3127	A4	3166	D6	3263	D2	3328	C6	3413	D3	3448	C2	4200	A5	4418	C2	4518	B5	5407	D2	7410	C1
2120	B4	2174	D7	2332	C6	2417	A7	3128	B4	3170	C6	3265	B5	3329	C6	3414	D3	3449	C1	4201	A6	4419	C1	4519	B4	5408	C1	7411	C1
2121	B4	2179	C3	2333	C5	2418	A7	3129	B4	3200	A5	3268	D2	3333	C6	3415	D3	3450	D1	4202	A6	4420	A5	4520	B3	5409	C1	7421	C2
2122	C4	2180	B4	2334	C6	2422	D1	3130	A5	3201	A5	3269	C2	3334	C5	3416	C1	3451	A6	4203	A5	4421	C8	4521	B3	6200	A5	7423	C1
2124	B6	2189	D3	2335	B6	2423	D1	3131	A4	3202	B2	3270	B8	3335	C6	3417	C1	3452	A7	4204	A5	4422	B7	4534	C6	6201	A5	7431	A5
2125	D7	2279	D3	2339	C6	2424	D5	3132	A4	3203	B2	3271	B8	3336	C6	3418	C1	3454	A5	4205	B2	4424	D4	4538	B1	6402	D1		
2128	D8	2280	B8	2339	C6	2425	D5	3133	A6	3204	B2	3302	B8	3337	C6	3420	C1	3455	A5	4206	B2	4425	D4	4539	C1	6403	D1		
2129	C4	2281	B8	2340	C6	2426	D5	3135	D5	3205	B5	3303	B8	3338	C6	3421	C1	3473	D7	4207	B2	4426	D4	4540	C1	6404	D1		
2135	B6	2282	B8	2341	C5	2427	D5	3137	D5	3206	B7	3304	C8	3339	C6	3422	B7	3474	A5	4208	B2	4427	D4	4541	B5	6405	D1		
2139	B4	2283	C8	2342	C5	2428	D5	3140	D6	3207	B7	3305	C8	3340	C6	3423	A7	4104	C3	4209	B8	4428	D4	4542	B3	6406	D1		
2143	B4	2302	C8	2343	C5	2429	D7	3142	D6	3208	B7	3306	D8	3341	C5	3424	D4	4107	B4	4280	B8	4430	D1	4543	B3	6408	D2		
2144	D6	2303	D8	2344	C5	3100	C5	3143	D6	3209	B8	3307	C7	3342	C5	3425	D4	4108	B4	4281	C8	4433	D2	4544	A5	6407	D1		

This assembly drawing shows a summary of all possible versions. For components used in a specific version see schematic diagram and respective parts list

PART A

The following reworks are make at prod. start-up on the SMD side:

1. 2 chip cap 4,7nF (4822 126 13193) added across Scart connector pins 2/4 and 4/6.
2. Wire added between Scart pin 5 to ground pin 1100.
3. Wire added between Elco 2126 -ve pin and 2123 -ve pin.
4. Zener diode BZX79-C12 (4822 130 34197) is added across Elco 2123 with the cathode to the +ve pin.
5. Wire added between EMC ground to Dig ground below the Digital In/Out socket 1181

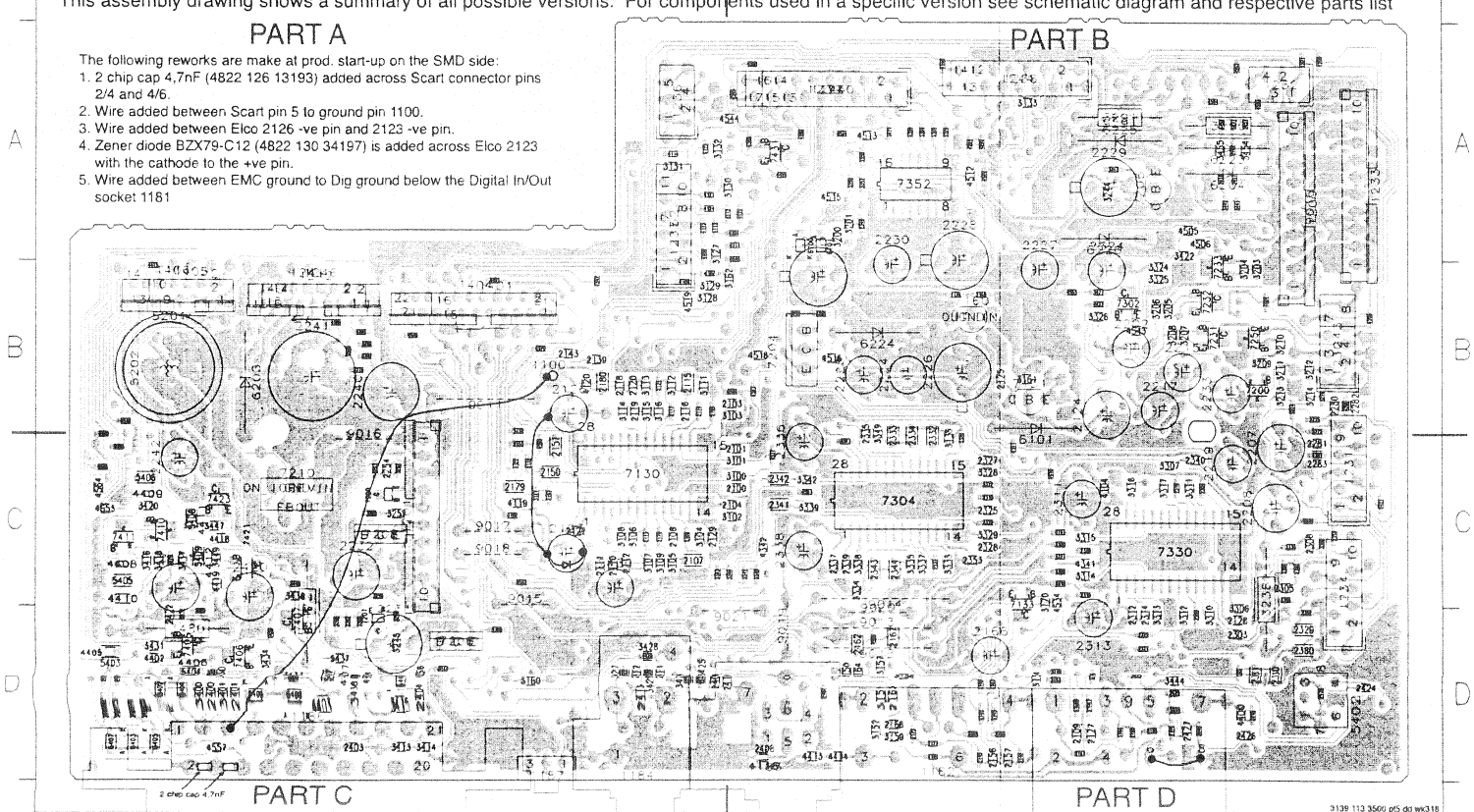

9-7

TOP VIEW - CHIP & COMPONENT

1100	B6	1237	A5	2124	B2	2210	C2	2229	A2	2431	C6	3230	D2	3275	C8	3467	D5	45100	B2
1152	A5	1238	A3	2126	B5	2211	C2	2230	A4	2432	C5	3231	C2	3276	C8	3468	D5	4522	D6
1182	D3	1239	A4	2130	C3	2212	C2	2231	D6	2433	D6	3232	C2	3277	C8	3472	D7	4523	B2
1183	D4	1240	A4	2154	C3	2213	C2	2232	C7	2434	D6	3233	C2	3290	A2	3480	D8	4524	B2
1184	D5	1241	B7	2155	C4	2214	C2	2233	B2	2435	D6	3234	D2	3291	A2	4102	C3	4525	C3
1186	D7	1242	B7	2158	C4	2215	B2	2240	B7	2436	D5	3235	C2	3456	B2	4103	B3	4526	A5
1187	D6	1243	B1	2159	C4	2216	D2	2241	B7	3123	C3	3236	C2	3457	B2	4105	D6	4527	C3
1200	A1	1244	A3	2165	D3	2217	B2	2242	C3	3124	C4	3237	C2	3458	B2	4106	D6	4528	B5
1201	C6	1245	A4	2166	D3	2218	C2	2311	C3	3125	C3	3238	C2	3459	B2	4118	C3	4529	C4
1230	B1	1246	B7	2185	D6	2219	C2	2313	C3	3126	C3	3239	C7	3460	C5	4125	D6	4530	C3
1231	C1	1401	B6	2186	D6	2220	C1	2324	A2	3153	D4	3240	C7	3461	C5	4126	D6	4531	C3
1232	A1	1404	B6	2201	A4	2224	B4	2336	C4	3155	D3	3256	B1	3462	C5	4193	C6	4532	C3
1233	A1	1405	B8	2202	B2	2225	B4	2338	C4	3156	D3	3257	C2	3463	D6	4194	C6	4533	C3
1234	C1	1406	B8	2207	C1	2226	B3	2420	C7	3180	C6	3272	C8	3464	D5	4196	D8	4535	B8
1235	A2	2102	C4	2208	C1	2227	A3	2421	C8	3182	C6	3273	C8	3465	C6	4197	D8	4536	D7
1236	A5	2123	C5	2209	C2	2228	A3	2430	C5	3183	C6	3274	C8	3466	D5	4401	A5	4537	C5

4550	C3	5402	D1	7150	D3	7454	C5	9010	A1	9016	D4	9020	D4	9291	A2				
4551	C3	6101	C3	7160	B3	7455	D6	9011	B6	9017	D4	9021	D4						
4552	C4	6202	B7	7204	B4	7456	D5	9012	D4	9018	C5								
4553	C4	6203	B7	7205	A2	9010	A1	9013	D4	9019	D4								
4554	D4	6204	A2	7206	D6	9011	B6	9014	C4	9020	D4								
4555	A3	6205	C7	7208	C7	9012	D4	9015	C6	9021	D4								
4558	C4	6223	A2	7210	C7	9013	D4	9016	B7	9291	A2								
4559	C4	6224	B4	7211	C7	9014	C4	9017	C5										
4560	D5	6225	A2	7230	C2	9015	C6	9018	C5										
4562	C4	6226	A2	7252	C8	9016	B7	9019	D4										
4563	C4	6227	C8	7253	C8	9017	C5	9020	D4										
4599	A5	6228	C8	7301	C3	9018	C5	9021	D4										
5201	B8	7100	D4	7402	A2	9019	D4	9291	A2										
5202	B8	7101	D3	7422	C4	9020	D4												
5232	C1	7131	B3	7451	B2	9021	D4												
5401	A5	7132	D5	7452	B2	9291	A2												

This assembly drawing shows a summary of all possible versions. For components used in a specific version see schematic diagram and respective parts list

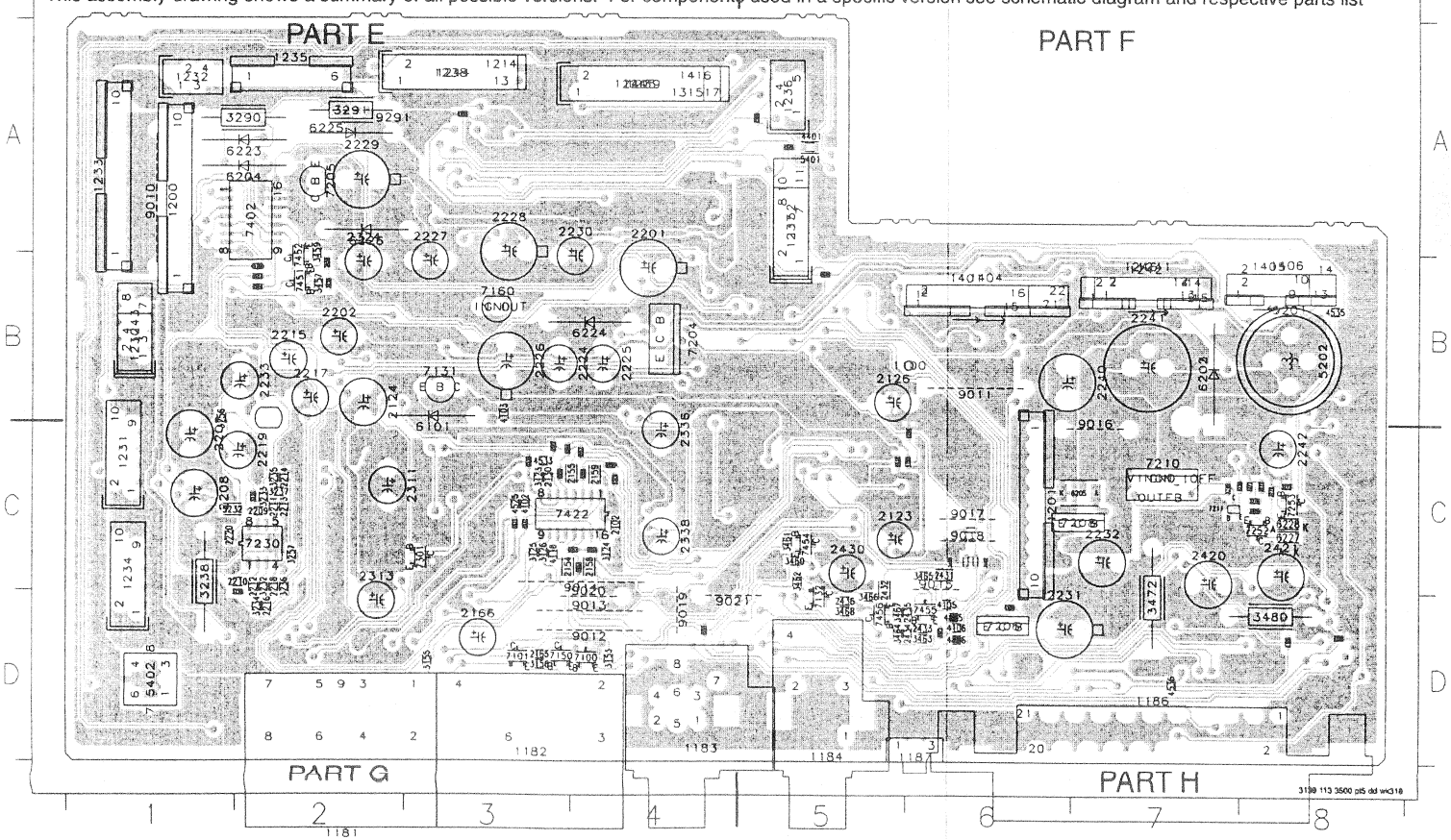

9-8

BOTTOM VIEW - PART A

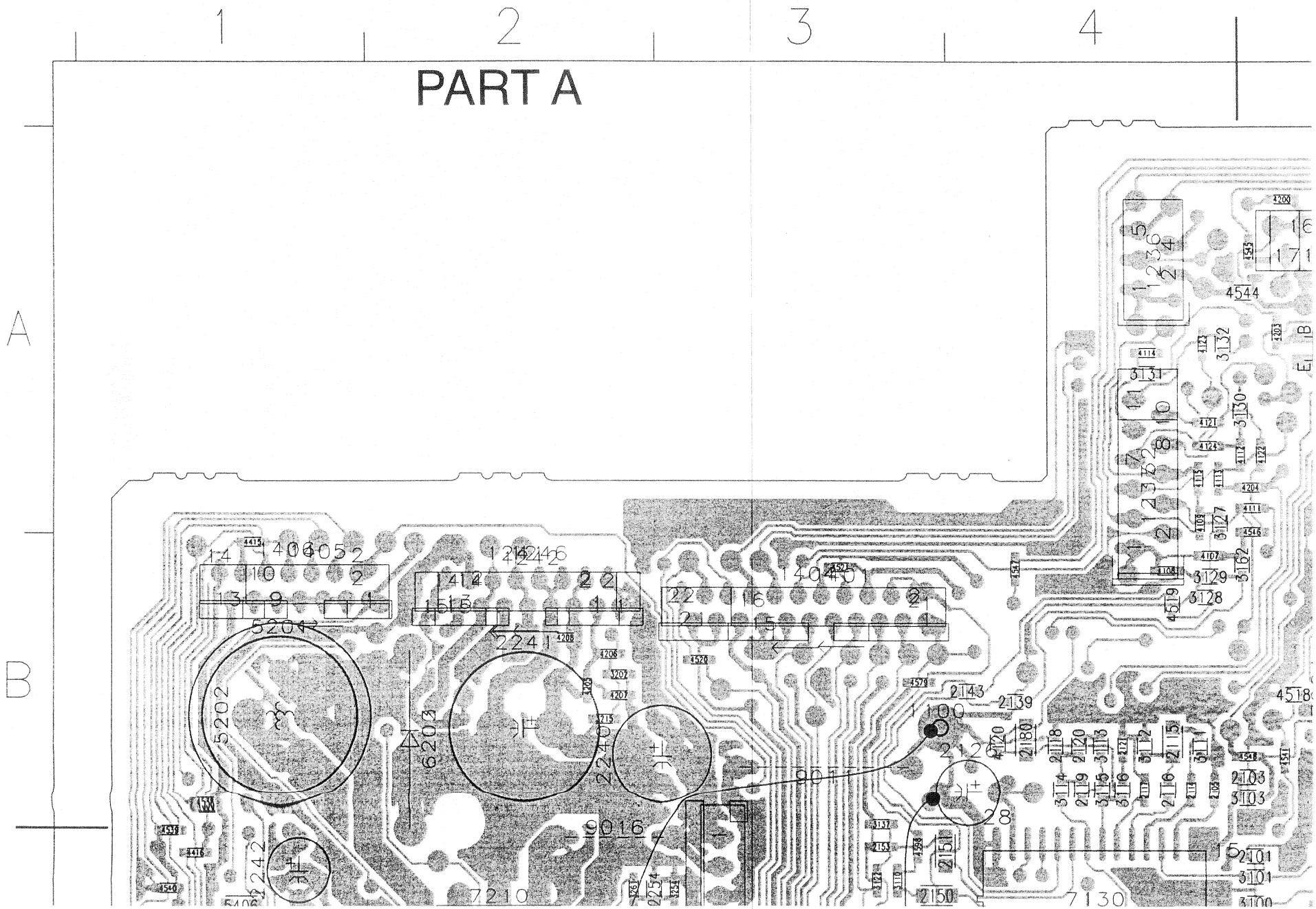

9-9

BOTTOM VIEW - PART B

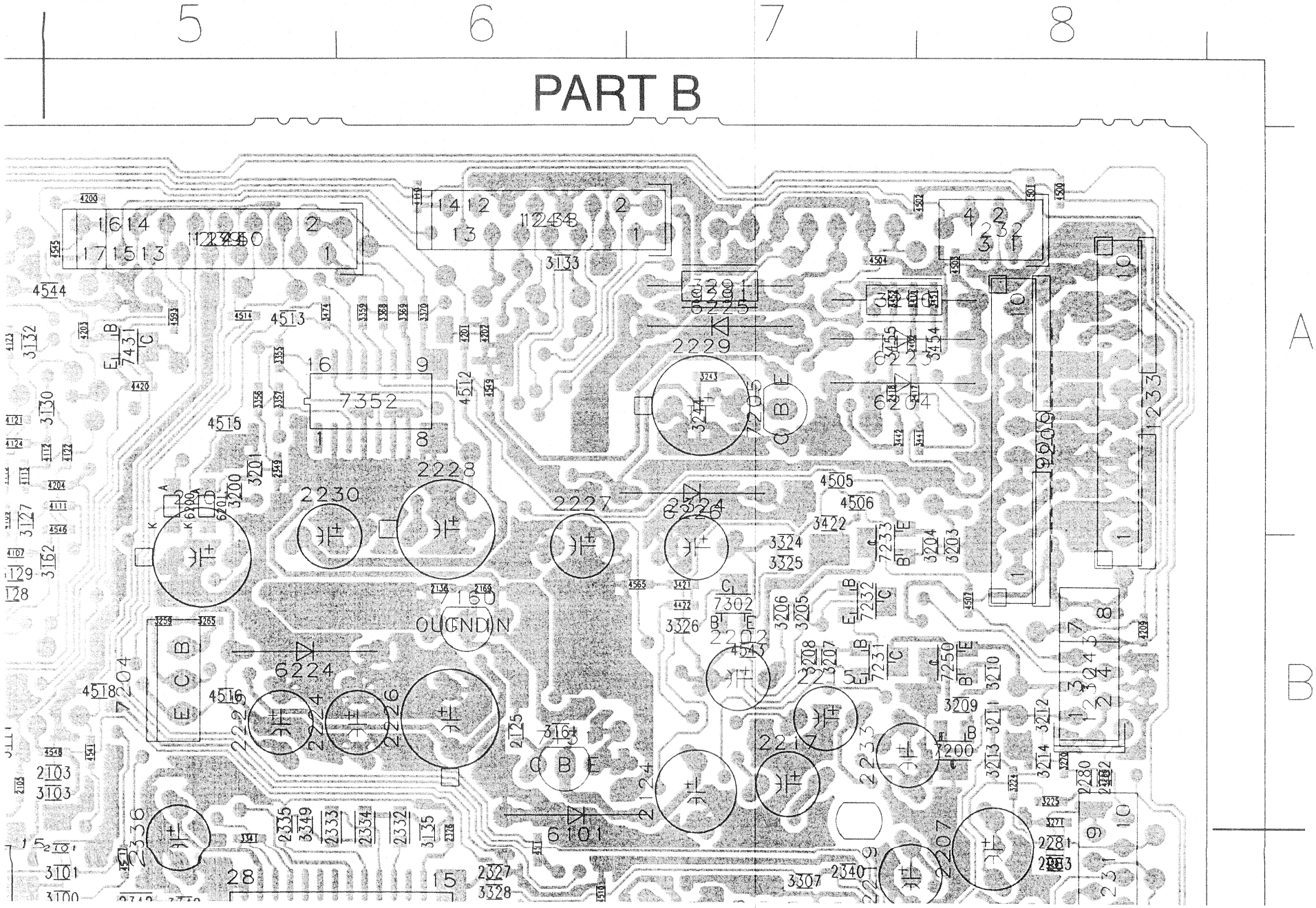

9-10

BOTTOM VIEW - PART C

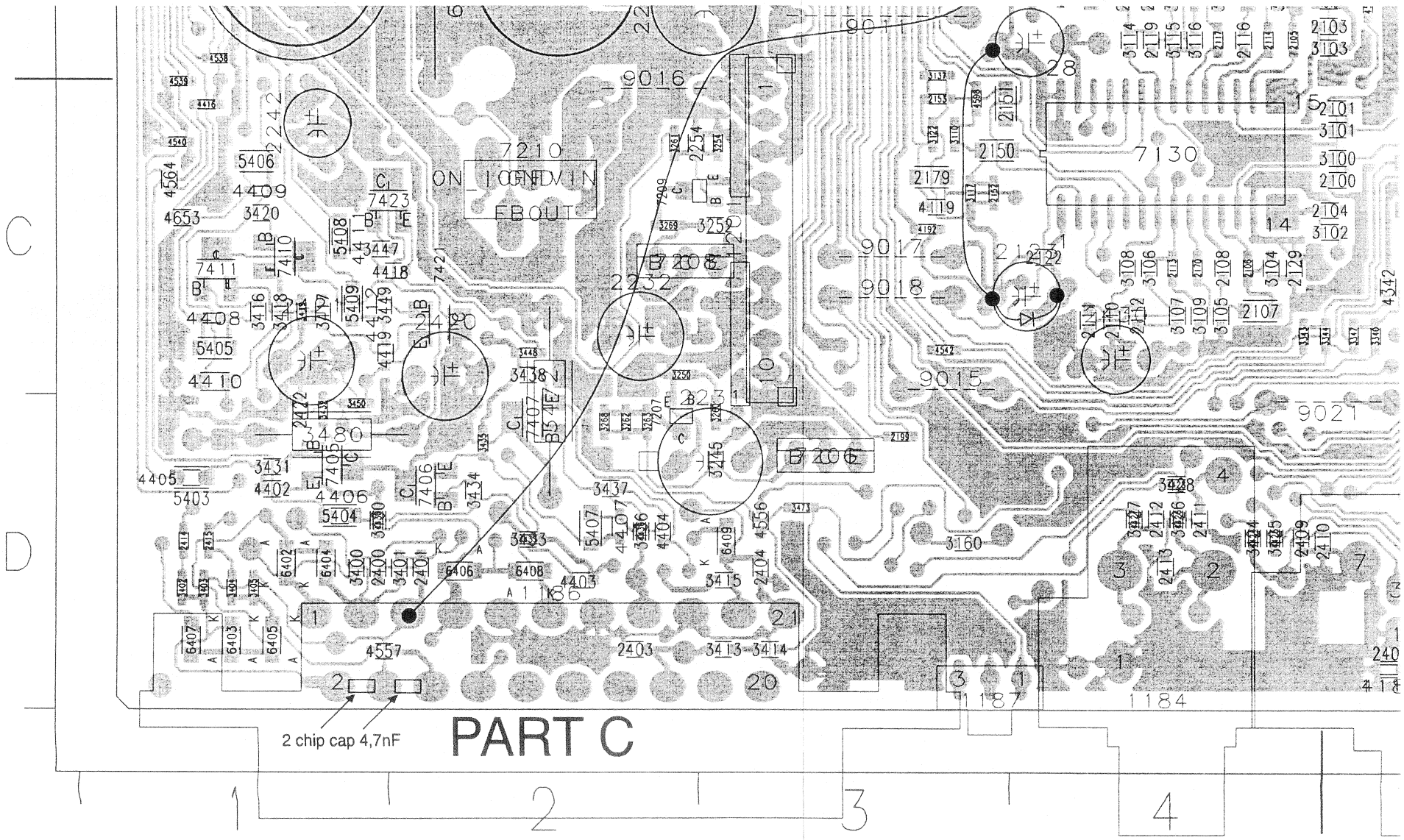

9-11

BOTTOM VIEW - PART D

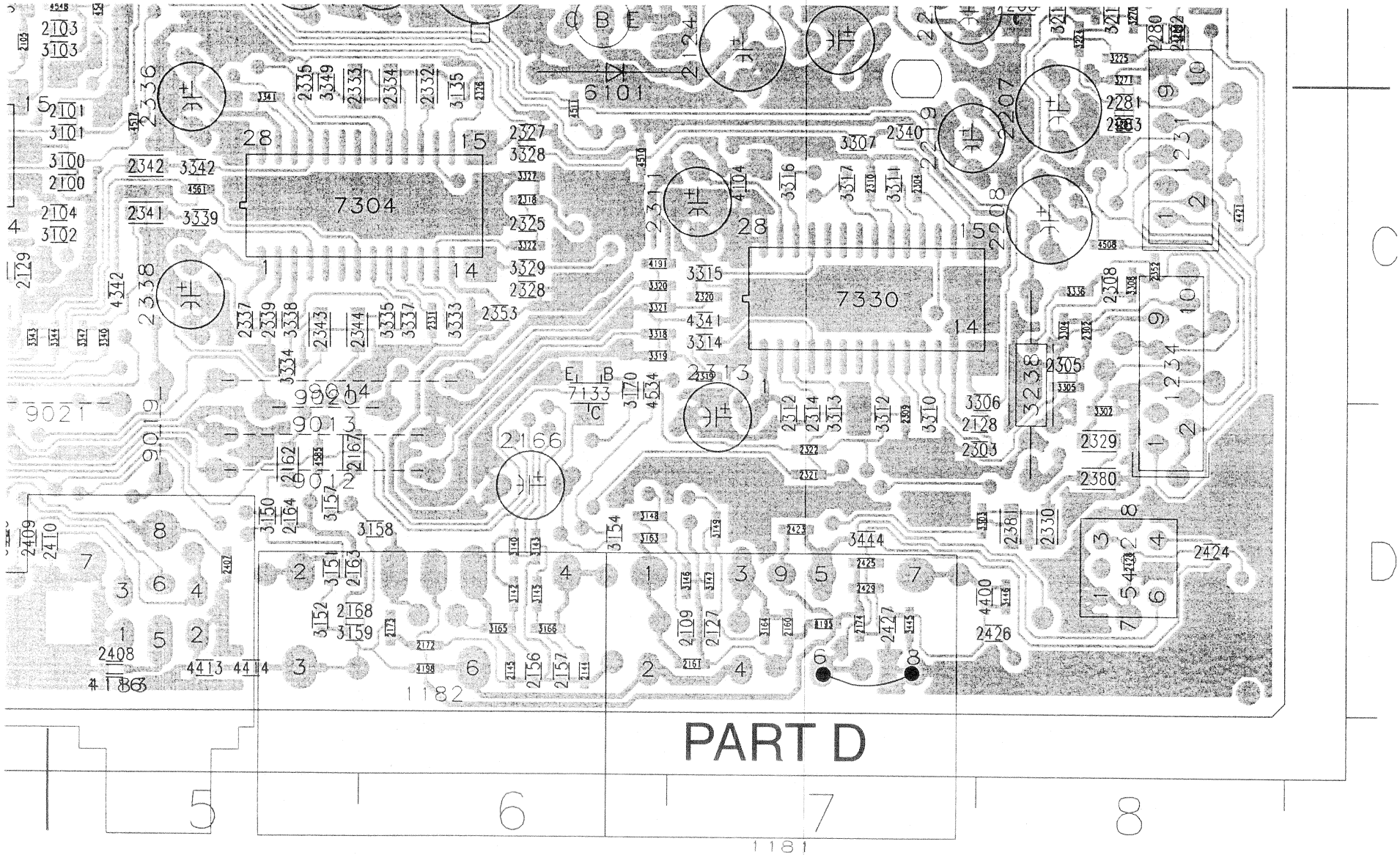

9-12

BOTTOM VIEW - PART E

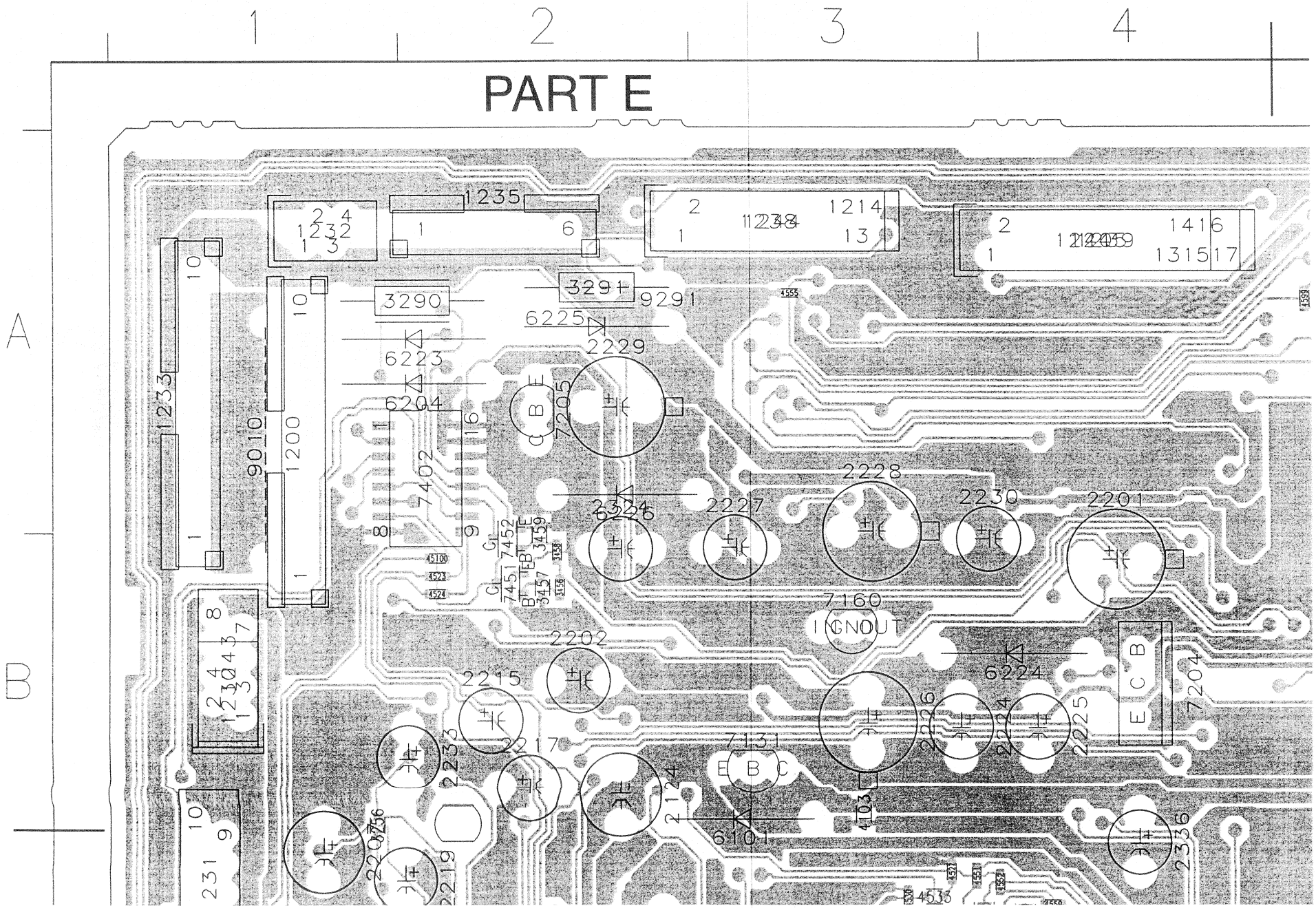

9-13

BOTTOM VIEW - PART F

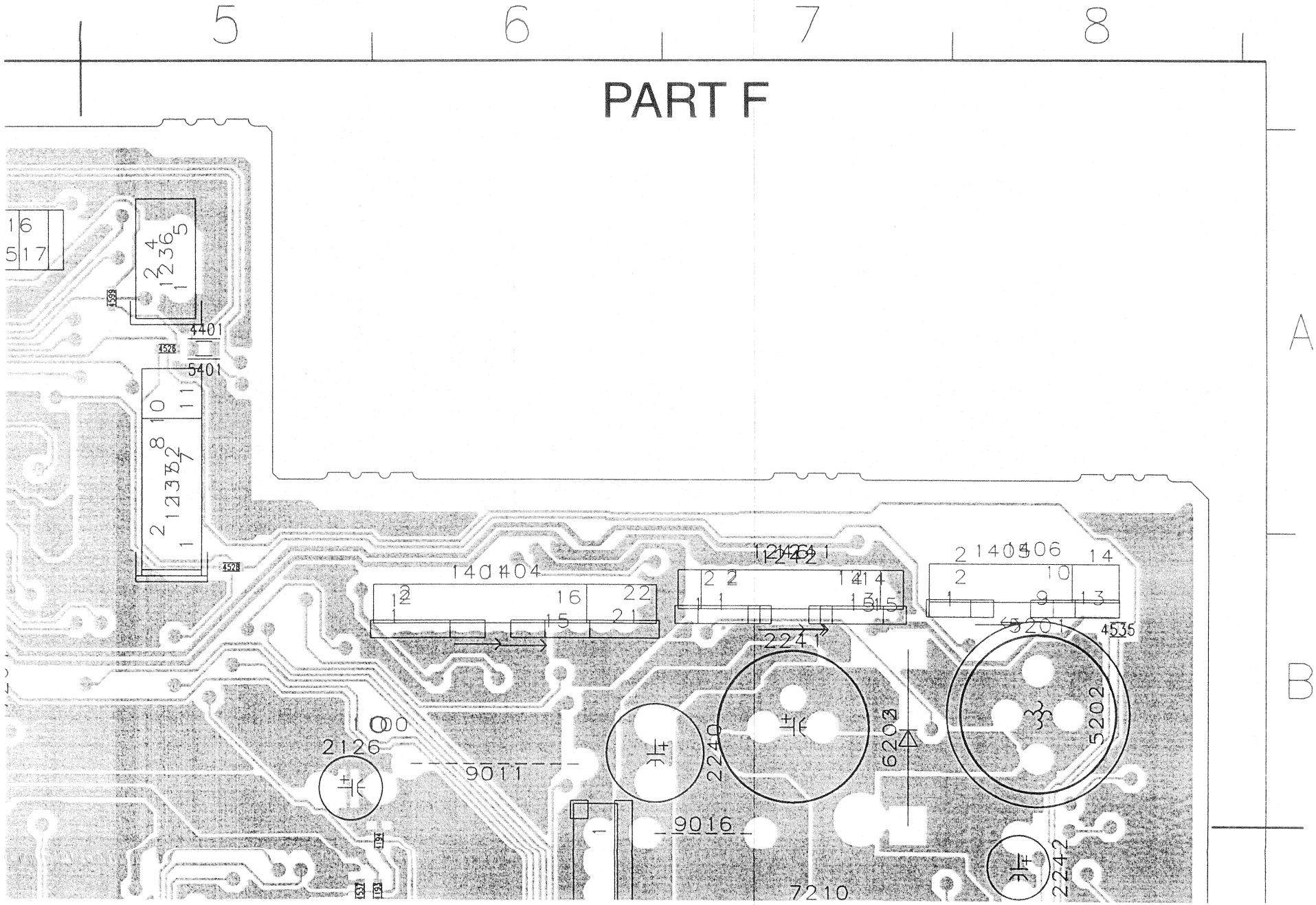

9-14

BOTTOM VIEW - PART G

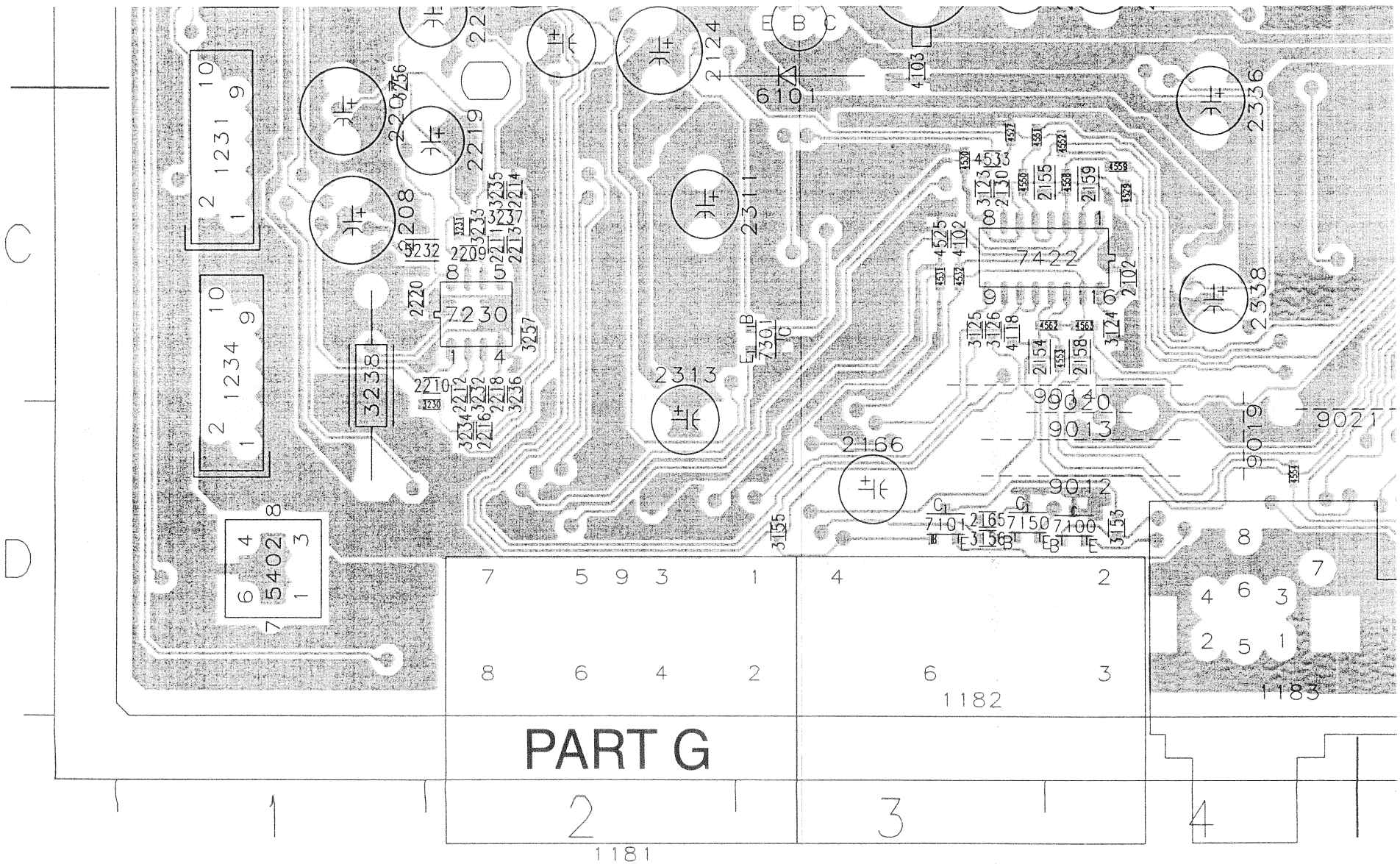

9-15

BOTTOM VIEW - PART H

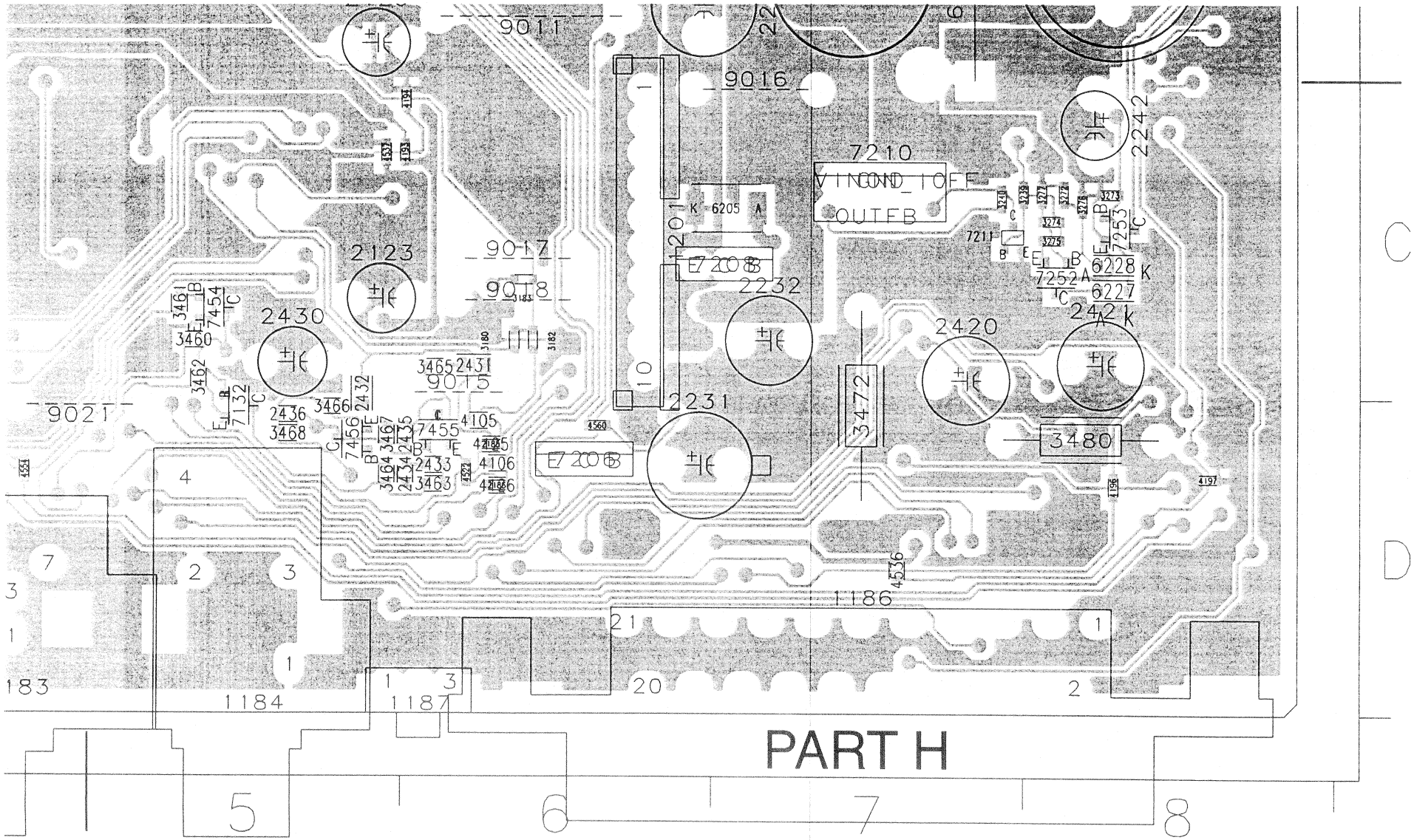

RESISTORS

3125	4822 051 30271	270R 5% 0,062W	
3126	4822 051 30271	270R 5% 0,062W	
3127	4822 051 30102	1k 5% 0,062W	
3128	4822 117 12891	220k 1% ERJ3E	
3129	4822 117 12891	220k 1% ERJ3E	
3130	4822 051 30101	100R 5% 0,062W	
3131	4822 051 30101	100R 5% 0,062W	
3132	4822 051 30101	100R 5% 0,062W	
3133	4822 051 30101	100R 5% 0,062W	
3135	4822 051 30562	5k6 5% 0,063W	
3137	4822 051 30103	10k 5% 0,062W	
3140	4822 117 12925	47k 1% 0,063W	
3142	4822 051 30332	3k3 5% 0,062W	
3143	4822 117 12925	47k 1% 0,063W	
3145	4822 051 30332	3k3 5% 0,062W	
3146	4822 117 12925	47k 1% 0,063W	
3147	4822 117 12925	47k 1% 0,063W	
3148	4822 051 30332	3k3 5% 0,062W	
3149	4822 051 30332	3k3 5% 0,062W	
3150	4822 051 30102	1k 5% 0,062W	
3151	4822 051 30471	470R 5% 0,062W	
3152	4822 117 12925	47k 1% 0,063W	
3153	4822 051 30222	2k2 5% 0,062W	
3154	4822 117 12925	47k 1% 0,063W	
3155	4822 051 30103	10k 5% 0,062W	
3156	4822 051 30222	2k2 5% 0,062W	
3157	4822 051 30102	1k 5% 0,062W	
3158	4822 051 30471	470R 5% 0,062W	
3159	4822 117 12925	47k 1% 0,063W	
3160	4822 051 30222	2k2 5% 0,062W	non-Kara
3160	4822 051 30332	3k3 5% 0,062W	non-Kara/Scart
3160	4822 051 30472	4k7 5% 0,062W	Kara
3161	4822 051 30151	150R 5% 0,062W	
3162	4822 051 30102	1k 5% 0,062W	
3163	4822 051 30332	3k3 5% 0,062W	
3164	4822 051 30332	3k3 5% 0,062W	
3165	4822 051 30332	3k3 5% 0,062W	
3166	4822 051 30332	3k3 5% 0,062W	
3170	4822 117 12925	47k 1% 0,063W	
3180	4822 051 30103	10k 5% 0,062W	
3182	4822 051 30103	10k 5% 0,062W	
3183	4822 051 30103	10k 5% 0,062W	
3200	4822 117 13632	100k 1% 0,62W	
3201	4822 117 13632	100k 1% 0,62W	
3202	4822 051 30103	10k 5% 0,062W	
3203	4822 051 30103	10k 5% 0,062W	
3204	4822 051 30103	10k 5% 0,062W	
3205	4822 051 30102	1k 5% 0,062W	
3206	4822 051 30562	5k6 5% 0,063W	
3207	4822 051 30472	4k7 5% 0,062W	
3208	4822 051 30472	4k7 5% 0,062W	
3209	4822 051 30102	1k 5% 0,062W	
3210	4822 051 30102	1k 5% 0,062W	
3211	4822 051 30339	33R 5% 0,062W	
3212	4822 051 30339	33R 5% 0,062W	
3213	4822 051 30479	47R 5% 0,062W	
3214	4822 051 30479	47R 5% 0,062W	
3215	4822 051 30102	1k 5% 0,062W	
3224	4822 051 30102	1k 5% 0,062W	
3225	4822 051 30102	1k 5% 0,062W	
3230	4822 051 30273	27k 5% 0,062W	
3231	4822 051 30273	27k 5% 0,062W	
3232	4822 051 30123	12k 5% 0,062W	
3233	4822 051 30682	6k8 5% 0,062W	
3234	4822 051 30221	220R 5% 0,062W	
3235	4822 051 30221	220R 5% 0,062W	
3236	4822 051 30682	6k8 5% 0,062W	
3237	4822 051 30123	12k 5% 0,062W	
3238	4822 052 10109	10R 5% 0,33W	
3239	4822 051 30103	10k 5% 0,062W	
3240	4822 117 12925	47k 1% 0,063W	
3245	4822 051 30562	5k6 5% 0,063W	
3250	4822 117 12925	47k 1% 0,063W	
3252	4822 051 30562	5k6 5% 0,063W	
3254	4822 117 12925	47k 1% 0,063W	
3256	4822 051 30472	4k7 5% 0,062W	
3257	4822 051 30472	4k7 5% 0,062W	
3259	4822 117 12902	8k2 1% 0,063W	
3260	4822 051 30103	10k 5% 0,062W	
3261	4822 051 30103	10k 5% 0,062W	
3262	4822 051 30102	1k 5% 0,062W	
3263	4822 051 30102	1k 5% 0,062W	
3265	4822 051 30471	470R 5% 0,062W	
3268	4822 051 30102	1k 5% 0,062W	
3269	4822 051 30221	220R 5% 0,062W	
3270	4822 051 30471	470R 5% 0,062W	
3271	4822 051 30471	470R 5% 0,062W	
3272	4822 051 30682	6k8 5% 0,062W	
3273	4822 051 30103	10k 5% 0,062W	
3274	4822 051 30682	6k8 5% 0,062W	
3275	4822 051 30689	68R 5% 0,063W	
3276	4822 051 30102	1k 5% 0,062W	
3277	4822 117 12925	47k 1% 0,063W	
3290	4822 052 10228	2R2 5% 0,33W	
3302	4822 051 30223	22k 5% 0,062W	
3303	4822 117 11817	1k2 1% 1/16W	
3304	4822 051 30222	2k2 5% 0,062W	
3305	4822 051 30689	68R 5% 0,063W	
3306	4822 051 30102	1k 5% 0,062W	
3307	4822 051 30102	1k 5% 0,062W	
3308	4822 051 30222	2k2 5% 0,062W	
3310	4822 051 30102	1k 5% 0,062W	
3311	4822 051 30102	1k 5% 0,062W	
3312	4822 051 30102	1k 5% 0,062W	

9-17

ELECTRICAL PARTS LIST - AV BOARD

3313	4822 051 30102	1k 5% 0,062W	
3314	4822 051 30102	1k 5% 0,062W	
3315	4822 051 30102	1k 5% 0,062W	
3316	4822 051 30102	1k 5% 0,062W	
3317	4822 051 30102	1k 5% 0,062W	
3318	4822 051 30682	6k8 5% 0,062W	
3319	4822 051 30103	10k 5% 0,062W	
3320	4822 051 30682	6k8 5% 0,062W	
3321	4822 051 30103	10k 5% 0,062W	
3322	4822 051 30689	68R 5% 0,063W	
3324	4822 051 30102	1k 5% 0,062W	
3325	4822 051 30102	1k 5% 0,062W	
3326	4822 051 30102	1k 5% 0,062W	
3327	4822 051 30222	2k2 5% 0,062W	
3328	4822 051 30102	1k 5% 0,062W	
3329	4822 051 30102	1k 5% 0,062W	
3333	4822 051 30102	1k 5% 0,062W	
3334	4822 051 30102	1k 5% 0,062W	
3335	4822 051 30102	1k 5% 0,062W	
3336	4822 051 30689	68R 5% 0,063W	
3337	4822 051 30102	1k 5% 0,062W	
3338	4822 051 30102	1k 5% 0,062W	
3339	4822 051 30102	1k 5% 0,062W	
3340	4822 051 30682	6k8 5% 0,062W	
3341	4822 051 30103	10k 5% 0,062W	Twin-SW
3342	4822 051 30102	1k 5% 0,062W	
3343	4822 051 30682	6k8 5% 0,062W	
3347	4822 051 30103	10k 5% 0,062W	
3349	4822 117 12902	8k2 1% 0,063W	
3355	4822 051 30681	680R 5% 0,062W	
3356	4822 051 30101	100R 5% 0,062W	
3357	4822 117 13632	100k 1% 0,62W	
3359	4822 117 12925	47k 1% 0,063W	
3368	4822 051 30101	100R 5% 0,062W	
3369	4822 051 30101	100R 5% 0,062W	
3370	4822 051 30101	100R 5% 0,062W	
3400	4822 051 30471	470R 5% 0,062W	Scart
3401	4822 051 30471	470R 5% 0,062W	Scart
3402	4822 117 12902	8k2 1% 0,063W	Scart
3403	4822 051 30223	22k 5% 0,062W	Scart
3404	4822 117 12902	8k2 1% 0,063W	Scart
3405	4822 051 30223	22k 5% 0,062W	Scart
3411	4822 051 30271	270R 5% 0,062W	
3413	4822 051 30479	47R 5% 0,063W	Scart
3414	4822 051 30339	33R 5% 0,063W	Scart
3415	4822 051 30689	68R 5% 0,063W	Scart
3416	4822 051 30101	100R 5% 0,062W	Scart
3417	4822 117 11817	1k2 5% 0,062W	Scart
3418	4822 051 30689	68R 5% 0,063W	Scart
3419	4822 117 11817	1k2 1% 1/16W	Scart
3420	4822 051 30101	100R 5% 0,062W	Scart
3424	4822 051 30689	68R 5% 0,063W	
3425	4822 051 30689	68R 5% 0,063W	
3426	4822 051 30689	68R 5% 0,063W	
3427	4822 051 30689	68R 5% 0,063W	
3428	4822 051 30689	68R 5% 0,063W	
3430	4822 051 30689	68R 5% 0,063W	Scart
3431	4822 051 30101	100R 5% 0,062W	
3432	4822 117 11817	1k2 1% 1/16W	
3433	4822 051 30689	68R 5% 0,063W	Scart
3434	4822 051 30101	100R 5% 0,062W	
3435	4822 117 11817	1k2 1% 1/16W	
3437	4822 051 30101	100R 5% 0,062W	Scart
3438	4822 051 30222	2k2 5% 0,062W	Scart
3441	4822 051 30471	470R 5% 0,062W	
3442	4822 051 30471	470R 5% 0,062W	
3444	4822 051 30339	33R 5% 0,062W	
3445	4822 051 30151	150R 5% 0,062W	
3447	4822 051 30101	100R 5% 0,062W	
3448	4822 117 11817	1k2 1% 1/16W	
3449	4822 051 30101	100R 5% 0,062W	
3450	4822 117 11817	1k2 1% 1/16W	
3451	4822 051 30153	15k 5% 0,062W	
3452	4822 051 30153	15k 5% 0,062W	
3454	4822 117 12925	47k 1% 0,063W	
3455	4822 117 12925	47k 1% 0,063W	
3456	4822 051 30153	15k 5% 0,062W	
3457	4822 117 12925	47k 1% 0,063W	
3458	4822 051 30153	15k 5% 0,062W	
3459	4822 117 12925	47k 1% 0,063W	
3460	4822 051 30103	10k 5% 0,062W	Scart
3461	4822 117 12925	47k 1% 0,063W	Scart
3462	4822 117 12925	47k 1% 0,063W	Scart
3463	4822 051 30222	2k2 5% 0,062W	Scart
3464	4822 051 30222	2k2 5% 0,062W	Scart
3465	4822 051 30102	1k 5% 0,062W	Scart
3466	4822 051 30102	1k 5% 0,062W	Scart
3467	4822 117 12925	47k 1% 0,063W	Scart
3468	4822 117 12925	47k 1% 0,063W	Scart
3472	4822 052 10478	4R7 5% 0,33W	
3473	4822 051 30103	10k 5% 0,062W	
3474	4822 051 30103	10k 5% 0,062W	
3480	4822 052 10478	4R7 5% 0,33W	
4103	4822 051 30008	0R Jumper 0603	
4104	4822 051 30008	0R Jumper 0603	
4107	4822 051 30008	0R Jumper 0603	
4109	4822 051 30008	0R Jumper 0603	
4111	4822 051 30008	0R Jumper 0603	
4112	4822 051 30008	0R Jumper 0603	
4114	4822 051 30008	0R Jumper 0603	
4116	4822 051 30008	0R Jumper 0603	
4121	4822 051 30008	0R Jumper 0603	
4123	4822 051 30008	0R Jumper 0603	
4191	4822 051 30008	0R Jumper 0603	

ELECTRICAL PARTS LIST - AV BOARD

MISCELLANEOUS

1181	2422 026 05399	Socket Aux-in/Digital-In/Out	
1182	4822 265 11151	Socket TV-in/Line-out	
1183	2422 033 00468	Socket CVBS/S-Video	
1184	2422 026 05342	Socket Pr/Pb/Y	non-Scart
1186	2422 025 12352	Scart Connector	Scart
1187	2422 127 00476	P-Scan Switch	P-scan
1230	4822 267 10733	Flex Socket 4P	non-Kara
1231	4822 267 10729	Flex Socket 10P	
1232	4822 267 10733	Flex Socket 4P	
1234	4822 267 10729	Flex Socket 10P	
1236	4822 267 10954	Flex Socket 5P	
1237	4822 265 11515	Flex Socket 8P	
1238	4822 267 10738	Flex Socket 13P	
1240	4822 267 51255	Flex Socket 14P	
1242	2422 025 16591	Flex Socket 13P	
1243	4822 265 11515	Flex Socket 8P	Kara
1401	2422 025 16525	Flex Socket 16P	non-Kara
1401	2422 025 18239	Flex Socket 18P	Kara
1405	2422 025 16587	Flex Socket 10P	

CAPACITORS

2100	3198 016 31020	1nF 25V	
2101	3198 016 31020	1nF 25V	
2102	2238 586 59812	100nF +80/-20% 50V	
2103	2020 552 94427	100pF 5% 50V	
2104	2020 552 94427	100pF 5% 50V	
2105	3198 017 44740	470nF 10V	
2106	3198 017 44740	470nF 10V	
2107	2020 552 96327	330nF 10% 16V	
2108	4822 126 13879	220nF +80/-20% 16V	
2109	2020 552 94427	100pF 5% 50V	
2110	5322 126 11579	3,3nF 10% 63V	
2111	3198 016 31020	1nF 25V	
2112	5322 126 11583	10nF 10% 50V	
2113	3198 017 44740	470nF 10V	
2114	3198 017 44740	470nF 10V	
2115	2020 552 96327	330nF 10% 16V	
2116	4822 126 13879	220nF +80/-20% 16V	
2117	4822 126 14238	2,2nF 50V	
2118	5322 126 11579	3,3nF 10% 63V	
2119	3198 016 31020	1nF 25V	
2120	5322 126 11583	10nF 10% 50V	
2121	3198 017 44740	470nF 10V	
2122	2238 916 15641	22nF 10% 25V	
2123	4822 124 81151	22uF 50V	
2124	4822 124 40196	220uF 20% 16V	
2125	4822 126 14238	2,2nF 50V	
2126	4822 124 40433	47uF 20% 25V	
2127	2020 552 94427	100pF 5% 50V	
2128	2020 552 94427	100pF 5% 50V	
2129	2238 586 59812	100nF +80/-20% 50V	
2130	2238 586 59812	100nF +80/-20% 50V	
2139	2238 586 59812	100nF +80/-20% 50V	
2143	2238 586 59812	100nF +80/-20% 50V	
2144	4822 126 13956	68pF 5% 63V	
2145	4822 126 13956	68pF 5% 63V	
2150	4822 126 14043	1uF +80/-20% 16V	
2151	4822 126 14043	1uF +80/-20% 16V	
2152	3198 016 31020	1nF 25V	
2153	3198 016 31020	1nF 25V	
2154	4822 126 14043	1uF +80/-20% 16V	
2155	4822 126 14043	1uF +80/-20% 16V	
2156	2020 552 94427	100pF 5% 50V	
2157	2020 552 94427	100pF 5% 50V	
2160	4822 126 13956	68pF 5% 63V	
2161	4822 126 13956	68pF 5% 63V	
2162	4822 126 14043	1uF +80/-20% 16V	
2163	3198 016 31020	1nF 25V	
2164	3198 016 31020	1nF 25V	
2165	3198 016 31020	1nF 25V	
2166	4822 124 40769	4,7uF 20% 100V	
2167	4822 126 14043	1uF +80/-20% 16V	
2168	3198 016 31020	1nF 25V	
2170	4822 126 14238	2,2nF 50V	
2172	3198 017 34730	47nF 16V	
2173	3198 017 34730	47nF 16V	
2174	3198 017 34730	47nF 16V	
2199	3198 017 41050	1uF 10V	Kara
2201	4822 124 40184	1000uF 20% 10V	
2202	4822 124 40248	10uF 20% 63V	
2207	4822 124 41751	47uF 20% 50V	
2208	4822 124 41751	47uF 20% 50V	
2209	4822 126 14508	180pF 5% 50V	
2210	4822 126 14508	180pF 5% 50V	
2211	4822 126 13881	470pF 5% 50V	
2212	4822 126 13881	470pF 5% 50V	
2213	2020 552 94427	100pF 5% 50V	
2214	3198 016 31020	1nF 25V	
2215	4822 124 81151	22uF 50V	
2216	3198 016 31020	1nF 25V	
2217	4822 124 81151	22uF 50V	
2218	2020 552 94427	100pF 5% 50V	
2219	4822 124 40433	47uF 20% 25V	
2220	2238 916 15641	22nF 10% 25V	
2224	4822 124 81151	22uF 50V	
2225	4822 124 81151	22uF 50V	
2226	4822 124 40255	100uF 20% 63V	
2227	4822 124 81151	22uF 50V	
2231	4822 124 80791	470uF 20% 16V	
2232	4822 124 40196	220uF 20% 16V	
2233	4822 124 41584	100uF 20% 10V	
2240	2020 012 93583	100uF 20% 25V	
2241	3198 026 51020	1000uF 20% 50V	
2242	4822 124 40433	47uF 20% 25V	

9-16

ELECTRICAL PARTS LIST - AV BOARD

2254	3198 017 44740	470nF 10V	
2280	3198 017 44740	470nF 10V	
2281	3198 017 44740	470nF 10V	
2282	3198 017 44740	470nF 10V	
2283	3198 017 44740	470nF 10V	
2302	3198 017 44740	470nF 10V	
2303	2238 586 59812	100nF +80/-20% 50V	
2304	3198 017 44740	470nF 10V	
2305	2020 552 94427	100pF 5% 50V	
2308	2020 552 94427	100pF 5% 50V	
2309	4822 126 13193	4,7nF 10% 63V	
2310	4822 126 13193	4,7nF 10% 63V	
2311	4822 124 40433	47uF 20% 25V	
2312	2238 916 15641	22nF 10% 25V	
2313	4822 124 40433	47uF 20% 25V	
2314	3198 016 31020	1nF 25V	
2318	3198 017 44740	470nF 10V	
2319	3198 017 44740	470nF 10V	
2320	3198 017 44740	470nF 10V	
2321	3198 017 44740	470nF 10V	
2322	3198 017 44740	470nF 10V	
2324	4822 124 12032	4,7uF 20% 50V	
2325	2020 552 94427	100pF 5% 50V	
2326	3198 017 44740	470nF 10V	
2327	2020 552 94427	100pF 5% 50V	
2328	2020 552 94427	100pF 5% 50V	
2329	2020 552 96684	470nF 10% 25V	
2330	3198 017 44740	470nF 10V	
2331	4822 126 13193	4,7nF 10% 63V	
2332	2020 552 96684	470nF 10% 25V	
2333	2020 552 96326	220nF 10% 16V	
2334	2222 780 15656	330nF 10% 16V	
2335	2020 552 94427	100pF 5% 50V	
2336	4822 124 40433	47uF 20% 25V	
2337	2238 916 15641	22nF 10% 25V	
2338	4822 124 40433	47uF 20% 25V	
2339	3198 016 31020	1nF 25V	
2340	2020 552 94427	100pF 5% 50V	
2341	4822 126 14043	1uF +80/-20% 16V	
2342	4822 126 14043	1uF +80/-20% 16V	Single-SW
2342	4822 126 13879	220nF +80/-20% 16V	Twin-SW
2343	4822 126 14043	1uF +80/-20% 16V	Single-SW
2343	2020 552 96684	470nF 10% 25V	Twin-SW
2344	4822 126 14043	1uF +80/-20% 16V	Single-SW
2344	2020 552 96684	470nF 10% 25V	Twin-SW
2349	2238 586 59812	100nF +80/-20% 50V	
2352	3198 017 44740	470nF 10V	
2353	2238 586 59812	100nF +80/-20% 50V	
2380	4822 126 14472	1uF 10% X7R 0805 10V	
2400	4822 126 13883	220pF 5% 50V	Scart
2401	4822 126 13883	220pF 5% 50V	Scart
2402	2238 586 59812	100nF +80/-20% 50V	
2403	3198 017 42230	22nF 50V	Scart
2404	4822 126 13883	220pF 5% 50V	Scart
2407	4822 126 13883	220pF 5% 50V	
2409	4822 126 13883	220pF 5% 50V	
2410	4822 126 13883	220pF 5% 50V	
2411	2020 552 94427	100pF 5% 50V	
2412	2020 552 94427	100pF 5% 50V	
2413	2020 552 94427	100pF 5% 50V	
2414	3198 017 41050	1uF 10V	Scart
2415	3198 017 41050	1uF 10V	Scart
2417	2020 552 94427	100pF 5% 50V	
2418	2020 552 94427	100pF 5% 50V	
2420	4822 124 40196	220uF 20% 16V	
2421	4822 124 40196	220uF 20% 16V	
2422	2238 586 59812	100nF +80/-20% 50V	
2423	4822 126 14249	560pF 10% 50V	
2424	2238 586 59812	100nF +80/-20% 50V	
2425	2238 586 59812	100nF +80/-20% 50V	
2426	5322 126 11583	10nF 10% 50V	
2427	4822 126 14508	180pF 5% 50V	
2428	4822 126 11785	47pF 5% 50V	
2429	4822 126 14241	330pF 50V	
2430	4822 124 40769	4,7uF 20% 100V	Scart
2431	4822 126 14043	1uF +80/-20% 16V	Scart
2432	4822 126 14043	1uF +80/-20% 16V	Scart
2433	3198 016 31020	1nF 25V	Scart
2434	3198 016 31020	1nF 25V	Scart
2435	3198 016 31020	1nF 25V	Scart
2436	3198 016 31020	1nF 25V	Scart

RESISTORS

3100	4822 051 30221	220R 5% 0,062W
3101	4822 051 30221	220R 5% 0,062W
3102	4822 051 30102	1k 5% 0,062W
3103	4822 051 30102	1k 5% 0,062W
3104	4822 051 30562	5k6 5% 0,063W
3105	4822 117 12902	8k2 1% 0,063W
3106	4822 051 30562	5k6 5% 0,063W
3107	4822 051 30183	18k 5% 0,062W
3108	4822 051 30103	10k 5% 0,062W
3109	4822 117 12925	47k 1% 0,063W
3110	4822 051 30682	6k8 5% 0,062W
3111	4822 051 30562	5k6 5% 0,063W
3112	4822 117 12902	8k2 1% 0,063W
3113	4822 051 30183	18k 5% 0,062W
3114	4822 051 30103	10k 5% 0,062W
3115	4822 051 30562	5k6 5% 0,063W
3116	4822 117 12925	47k 1% 0,063W
3117	4822 051 30103	10k 5% 0,062W
3122	4822 051 30682	6k8 5% 0,062W
3123	4822 051 30271	270R 5% 0,062W
3124	4822 051 30271	270R 5% 0,062W

ELECTRICAL PARTS LIST - AV BOARD

RESISTORS

4192	4822 051 30008	0R Jumper 0603	
4195	4822 051 30008	0R Jumper 0603	
4200	4822 051 30008	0R Jumper 0603	
4201	4822 051 30008	0R Jumper 0603	
4205	4822 051 30008	0R Jumper 0603	
4206	4822 051 30008	0R Jumper 0603	
4209	4822 051 30008	0R Jumper 0603	non-Kara
4341	4822 051 30008	0R Jumper 0603	
4342	4822 051 30008	0R Jumper 0603	
4400	4822 051 30008	0R Jumper 0603	
4404	4822 051 30008	0R Jumper 0603	Non-Scart
4405	4822 051 30008	0R Jumper 0603	
4406	4822 051 30008	0R Jumper 0603	
4407	4822 051 30008	0R Jumper 0603	
4408	4822 051 30008	0R Jumper 0603	Scart
4409	4822 051 30008	0R Jumper 0603	
4410	4822 051 30008	0R Jumper 0603	Non-Scart
4411	4822 051 30008	0R Jumper 0603	
4412	4822 051 30008	0R Jumper 0603	
4414	4822 051 30008	0R Jumper 0603	Scart
4415	4822 051 30008	0R Jumper 0603	
4416	4822 051 30008	0R Jumper 0603	
4420	4822 051 30008	0R Jumper 0603	Scart
4421	4822 051 30008	0R Jumper 0603	
4424	4822 051 30008	0R Jumper 0603	
4425	4822 051 30008	0R Jumper 0603	
4426	4822 051 30008	0R Jumper 0603	
4427	4822 051 30008	0R Jumper 0603	
4428	4822 051 30008	0R Jumper 0603	
4430	4822 051 30008	0R Jumper 0603	Scart
4433	4822 051 30008	0R Jumper 0603	Scart
4436	4822 051 30008	0R Jumper 0603	Scart
4500	4822 051 30008	0R Jumper 0603	
4501	4822 051 30008	0R Jumper 0603	
4502	4822 051 30008	0R Jumper 0603	
4503	4822 051 30008	0R Jumper 0603	
4504	4822 051 30008	0R Jumper 0603	
4505	4822 051 30008	0R Jumper 0603	
4506	4822 051 30008	0R Jumper 0603	
4507	4822 051 30008	0R Jumper 0603	
4508	4822 051 30008	0R Jumper 0603	
4509	4822 051 30008	0R Jumper 0603	
4510	4822 051 30008	0R Jumper 0603	
4511	4822 051 30008	0R Jumper 0603	
4512	4822 051 30008	0R Jumper 0603	
4513	4822 051 30008	0R Jumper 0603	
4514	4822 051 30008	0R Jumper 0603	
4515	4822 051 30008	0R Jumper 0603	
4516	4822 051 30008	0R Jumper 0603	
4517	4822 051 30008	0R Jumper 0603	
4518	4822 051 30008	0R Jumper 0603	
4519	4822 051 30008	0R Jumper 0603	
4520	4822 051 30008	0R Jumper 0603	
4521	4822 051 30008	0R Jumper 0603	
4522	4822 051 30008	0R Jumper 0603	
4523	4822 051 30008	0R Jumper 0603	
4524	4822 051 30008	0R Jumper 0603	
4525	4822 051 30008	0R Jumper 0603	
4526	4822 051 30008	0R Jumper 0603	
4527	4822 051 30008	0R Jumper 0603	
4528	4822 051 30008	0R Jumper 0603	
4529	4822 051 30008	0R Jumper 0603	
4530	4822 051 30008	0R Jumper 0603	
4531	4822 051 30008	0R Jumper 0603	
4532	4822 051 30008	0R Jumper 0603	
4533	4822 051 30008	0R Jumper 0603	
4534	4822 051 30008	0R Jumper 0603	
4535	4822 051 30008	0R Jumper 0603	
4536	4822 051 30008	0R Jumper 0603	
4537	4822 051 30008	0R Jumper 0603	
4538	4822 051 30008	0R Jumper 0603	
4539	4822 051 30008	0R Jumper 0603	
4540	4822 051 30008	0R Jumper 0603	
4541	4822 051 30008	0R Jumper 0603	
4542	4822 051 30008	0R Jumper 0603	
4543	4822 051 30008	0R Jumper 0603	
4544	4822 051 30008	0R Jumper 0603	
4545	4822 051 30008	0R Jumper 0603	
4546	4822 051 30008	0R Jumper 0603	
4547	4822 051 30008	0R Jumper 0603	
4548	4822 051 30008	0R Jumper 0603	
4549	4822 051 30008	0R Jumper 0603	
4550	4822 051 30008	0R Jumper 0603	
4551	4822 051 30008	0R Jumper 0603	
4552	4822 051 30008	0R Jumper 0603	
4553	4822 051 30008	0R Jumper 0603	
4554	4822 051 30008	0R Jumper 0603	
4555	4822 051 30008	0R Jumper 0603	
4556	4822 051 30008	0R Jumper 0603	
4557	4822 051 30008	0R Jumper 0603	
4558	4822 051 30008	0R Jumper 0603	
4559	4822 051 30008	0R Jumper 0603	
4560	4822 051 30008	0R Jumper 0603	
4564	4822 051 30008	0R Jumper 0603	
4579	4822 051 30008	0R Jumper 0603	
4585	4822 051 30008	0R Jumper 0603	
4593	4822 051 30008	0R Jumper 0603	
4598	4822 051 30008	0R Jumper 0603	
4599	4822 051 30008	0R Jumper 0603	
4653	4822 051 30008	0R Jumper 0603	

COILS & FILTERS

5201	2422 536 00548	Fixed Ind, 100uH 15%
5232	4822 157 10586	2,2uH 10%
5401	4822 157 10586	2,2uH 10%
5402	4822 157 70601	Inductor 100uH

DIODES

6101	4822 130 61219	BZX79-B10	
6200	4822 130 11397	BAS316	
6201	4822 130 11397	BAS316	
6202	4822 130 10871	SBYV27-200	
6205	9322 128 70685	SS14	
6223	4822 130 31878	1N4003G	
6224	4822 130 34278	BZX79-B6V8	
6225	4822 130 31878	1N4003G	
6227	4822 130 11397	BAS316	
6228	4822 130 11397	BAS316	

TRANSISTORS & INTEGRATED CIRCUITS

7100	5322 130 60159	BC847B	
7101	4822 130 60373	BC857B	
7130	9322 150 74668	TDA7468D	
7131	4822 130 40959	BC547B	
7132	4822 130 60373	BC857B	Scart
7133	4822 130 42804	BC817-25	
7150	5322 130 60159	BC847B	
7200	4822 130 42804	BC817-25	
7204	4822 130 63166	BD242B	
7206	4822 130 40995	BD438	
7207	3198 010 42310	BC847BW	
7208	4822 130 40995	BD438	
7209	3198 010 42310	BC847BW	
7210	9322 188 75682	LM2576T-3,3	
7211	3198 010 42310	BC847BW	
7230	4822 209 31378	NJM4556MB	
7231	4822 130 60373	BC857B	
7232	5322 130 60159	BC847B	
7233	5322 130 60159	BC847B	
7250	4822 130 42804	BC817-25	
7252	4822 130 60373	BC857B	
7253	5322 130 60159	BC847B	
7301	5322 130 60159	BC847B	
7302	4822 130 60373	BC857B	
7304	9322 150 74668	TDA7468D	
7330	9322 150 74668	TDA7468D	
7352	9337 148 20653	74HC4051D	
7402	4822 209 17345	M62320FP	
7405	5322 130 60159	BC847B	
7406	5322 130 60159	BC847B	
7407	5322 130 60159	BC847B	Scart
7410	5322 130 60159	BC847B	Scart
7411	5322 130 60159	BC847B	Scart
7421	5322 130 60159	BC847B	
7422	5322 209 11102	HEF4052BT	
7423	5322 130 60159	BC847B	
7451	4822 130 42804	BC817-25	
7452	4822 130 42804	BC817-25	
7454	4822 130 42804	BC817-25	Scart
7455	5322 130 60159	BC847B	Scart
7456	5322 130 60159	BC847B	Scart

Note: Only the parts mentioned in this list are normal service spare parts.

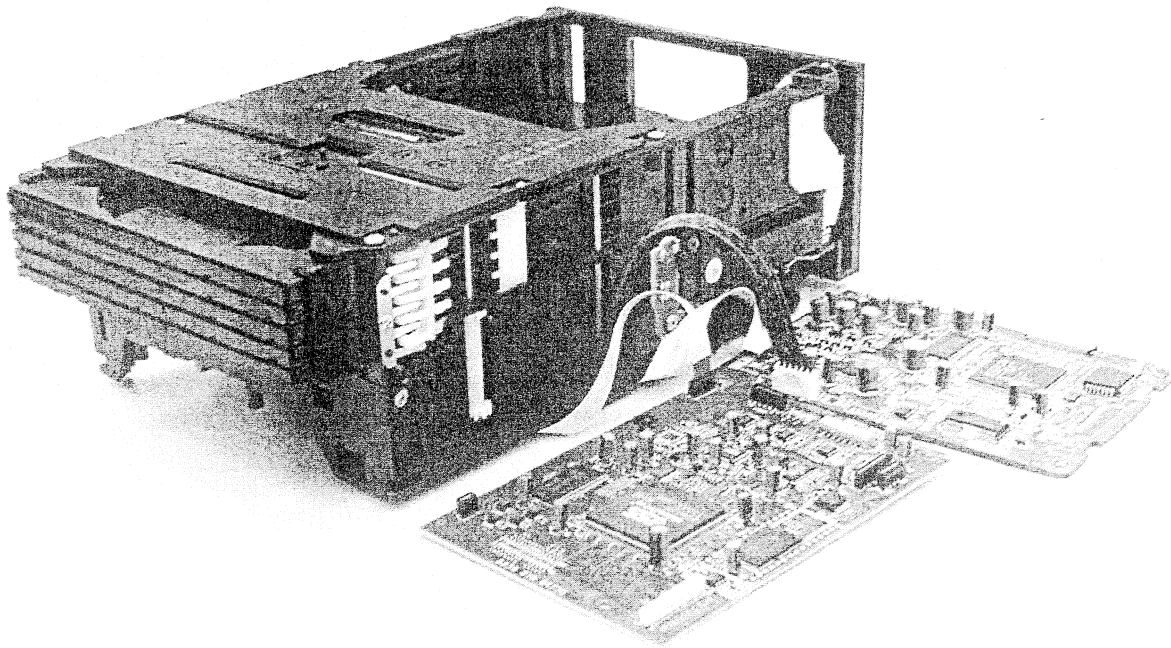

5DTC MODULE

(DVD Version)

TABLE OF CONTENTS

Emergency opening 10-2
Location of switches 10-3
Blockdiagram 10-3

Control Board
Circuit diagram 10-4
Component Layout 10-4

Exploded view loader 10-5
Mechanical assembly drawing + mechanical parts list 10-6
Electrical parts list 10-7

For Mono-FE (Front End) and Mono-BE (Back End) PCB assemblies information see chapters 11 and 12 in this service documentation.

Emergency opening of the trays

The trays of the 5DTC are mechanically locked.

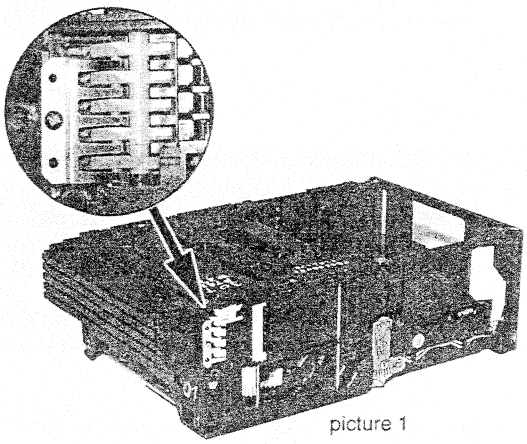

picture 1

To open tray 1, 2 and 3 move lever (pos 29) backwards (e.g. with a screwdriver - see picture 2) to its endposition.

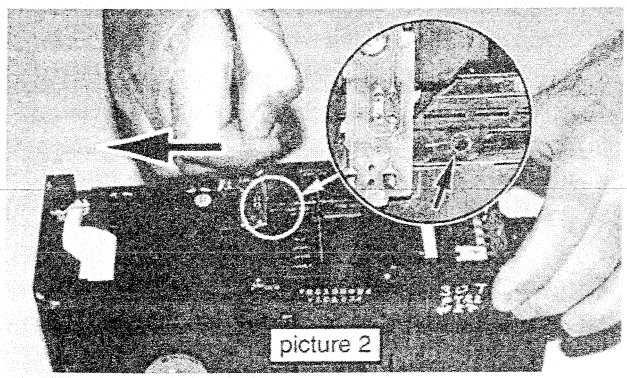

picture 2

Release the locking mechanism and pull out the tray (see picture 3).

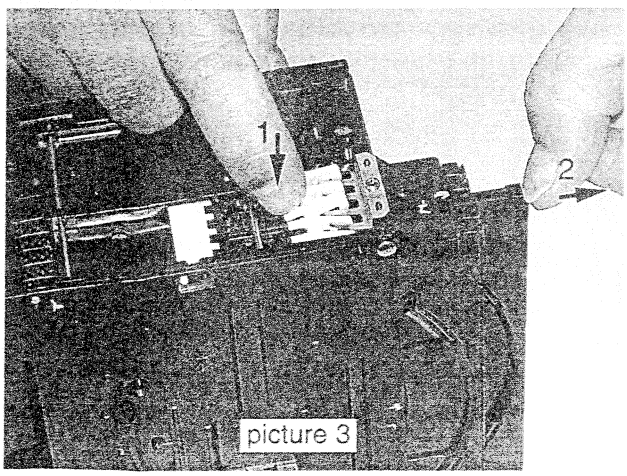

picture 3

To open tray 4 and 5 move lever (pos 29) forward to its endposition (see picture 4).

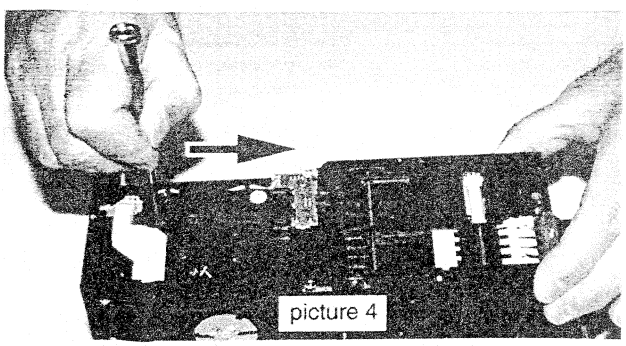

picture 4

Release snap as shown in picture 5 and pull tray out.

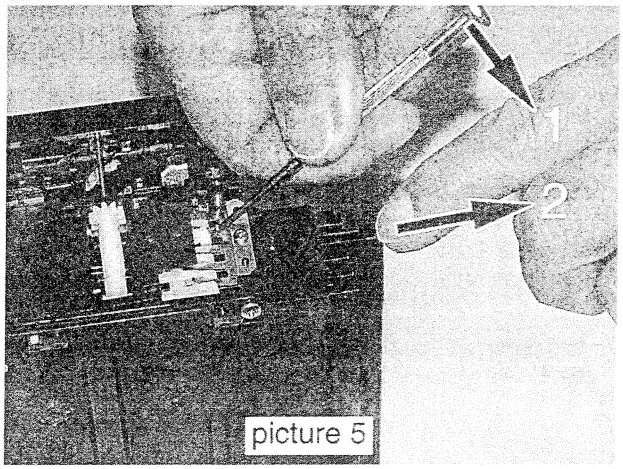

picture 5

To remove a CD from Play Position perform following steps:

1. Open tray 1 as described before.
2. Tear the tray out with speed (see picture 6). The tray can be inserted aftewards without any alignment.

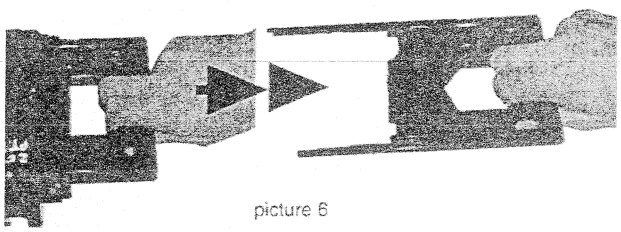

picture 6

3. Move lever (pos 29) forward to its endposition (see picture 4).
4. Push lever (pos 31) forward (see picture 7).

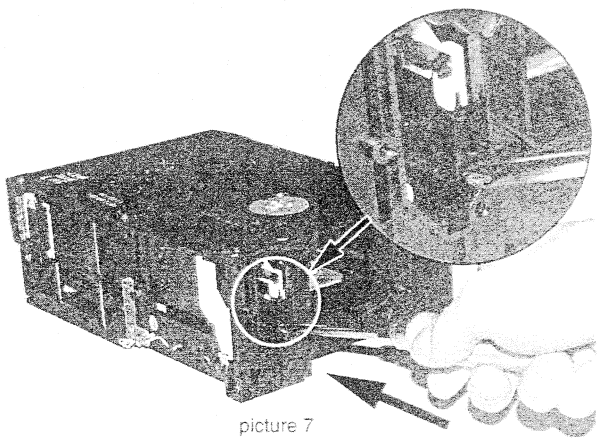

picture 7

5. Remove CD.

10-3

Blockdiagram

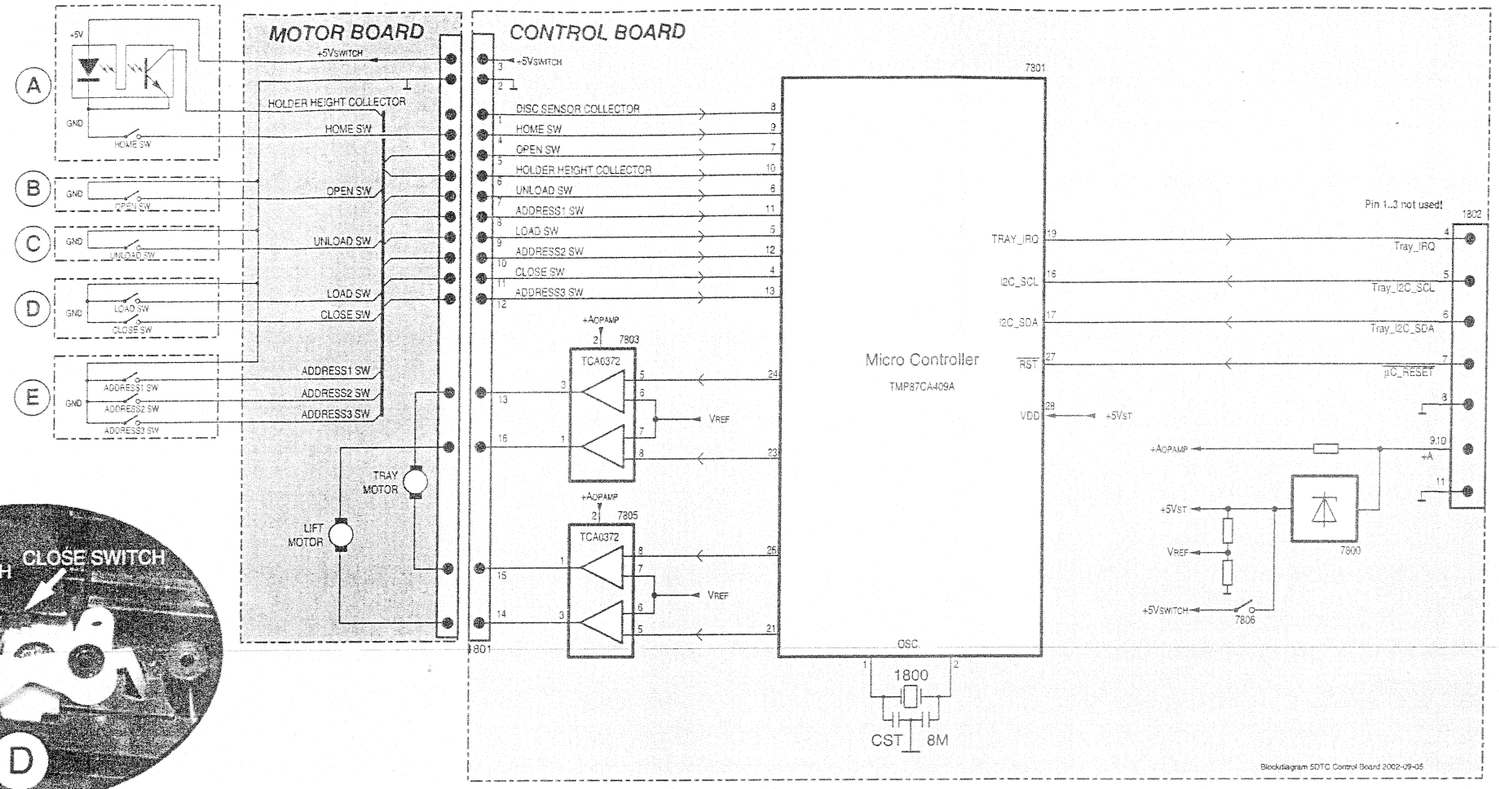

Location of switches

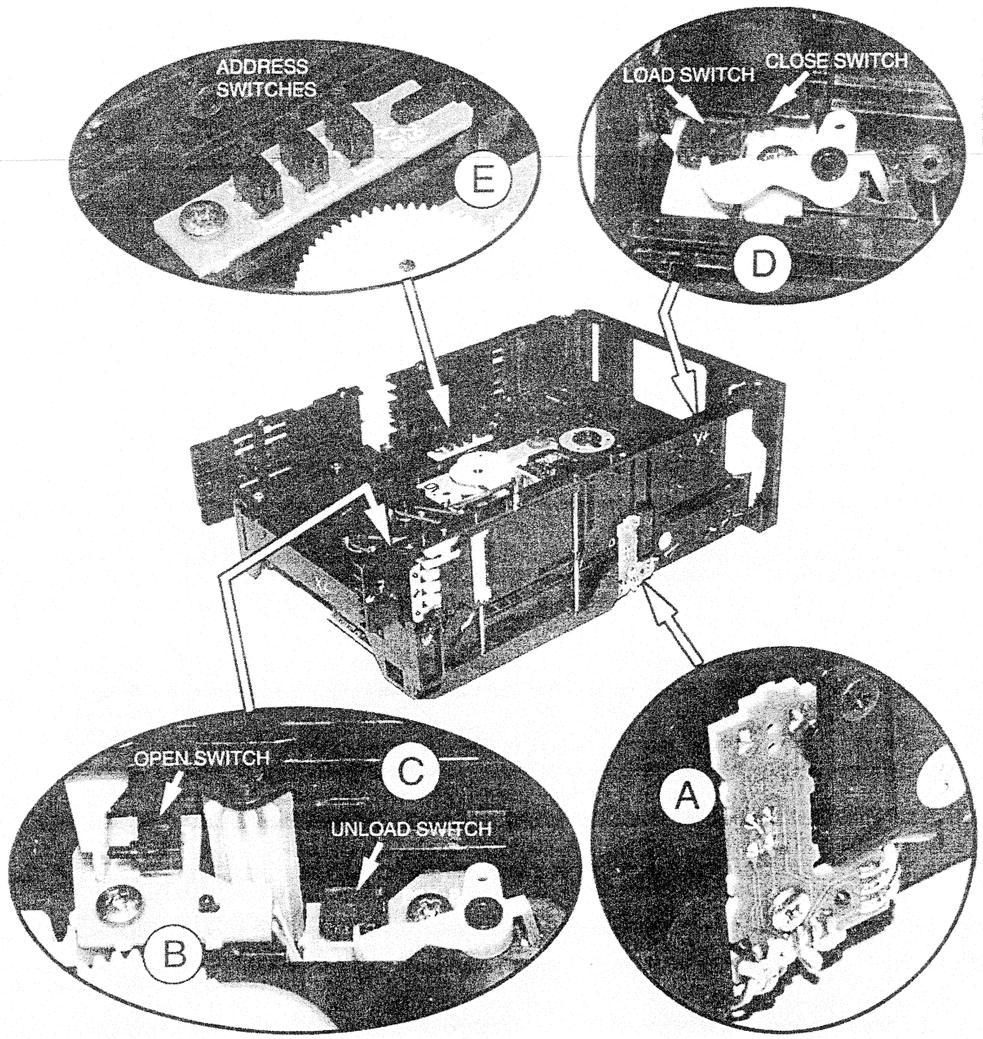

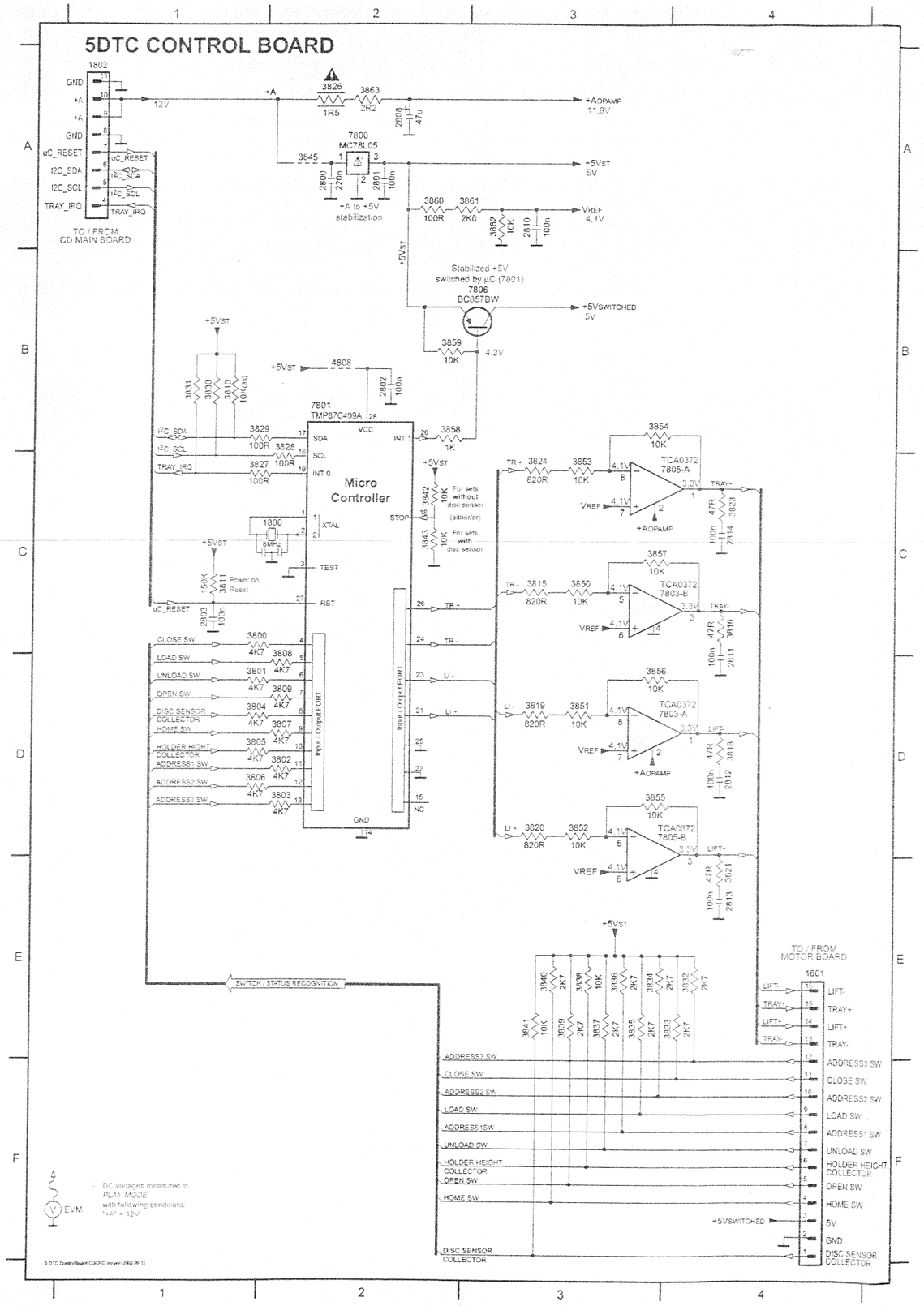

Mapping for Circuit Diagram

1800	C2	2810	A3	3804	D1	3811	C1	3824	C3	3833	E4	3841	E3	3854	B3	3862	A3	7805-B	D3
1801	E4	2811	D4	3805	D1	3815	C3	3826	A2	3834	E3	3842	C2	3855	D3	3863	A2	7806	B3
1802	A1	2812	D4	3806	D1	3816	C4	3827	C1	3835	E3	3843	C2	3856	D3	4808	B2		
2800	A2	2813	E4	3807	D2	3818	D4	3828	C2	3836	E3	3845	A2	3857	C3	7800	A2		
2801	A2	2814	C4	3808	D1	3819	D3	3829	B1	3837	E3	3850	C3	3858	B2	7801	B2		
2802	B2	3800	C1	3808	D2	3820	D3	3830	B1	3838	E3	3851	D3	3859	B3	7803-A	D3		
2803	C1	3802	D2	3809	D2	3821	E4	3831	B1	3839	E3	3852	D3	3860	A2	7803-B	C3		
2808	A2	3803	D2	3810	B1	3823	C4	3832	E4	3840	E3	3853	C3	3861	A2	7805-A	C3		

Mapping for Component Layout

1800	B2	2810	A5	3806	C4	3819	A4	3832	C4	3843	A2	3857	A5	4804	A2	4816	D2	7803	A5
1801	C4	2811	A5	3807	C3	3820	A4	3833	B2	3845	D2	3858	B5	4805	C1	4817	A6	7804	B2
1802	C2	2812	A6	3808	B2	3821	B5	3834	C4	3847	B1	3859	C5	4806	A2	4818	C5	7806	C5
2800	D2	2813	B5	3809	C3	3823	B6	3835	C2	3848	B1	3860	C5	4807	C1	4819	A6	9801	C5
2801	D2	2814	B6	3810	C2	3824	A4	3836	C4	3850	A4	3861	B5	4808	C2	4820	B5	9802	B2
2802	A2	3800	B2	3811	A2	3826	B6	3837	C3	3851	A4	3862	A5	4809	C5	4821	C3	9804	A5
2803	B1	3801	C3	3812	A1	3827	B2	3838	C4	3852	A4	3863	B6	4810	B2	4822	C3		
2804	C2	3802	C4	3813	B2	3828	C2	3839	C3	3853	A4	4800	C2	4811	C1	6801	B1		
2805	C1	3803	C4	3815	A4	3829	B2	3840	C4	3854	B5	4801	C2	4812	B2	7800	D2		
2808	A6	3804	C3	3816	A5	3830	C2	3841	C3	3855	B5	4802	C2	4813	B6	7801	B4		
2809	C2	3805	C4	3818	A6	3831	C1	3842	A2	3856	A6	4803	D1	4814	A4	7802	A2		

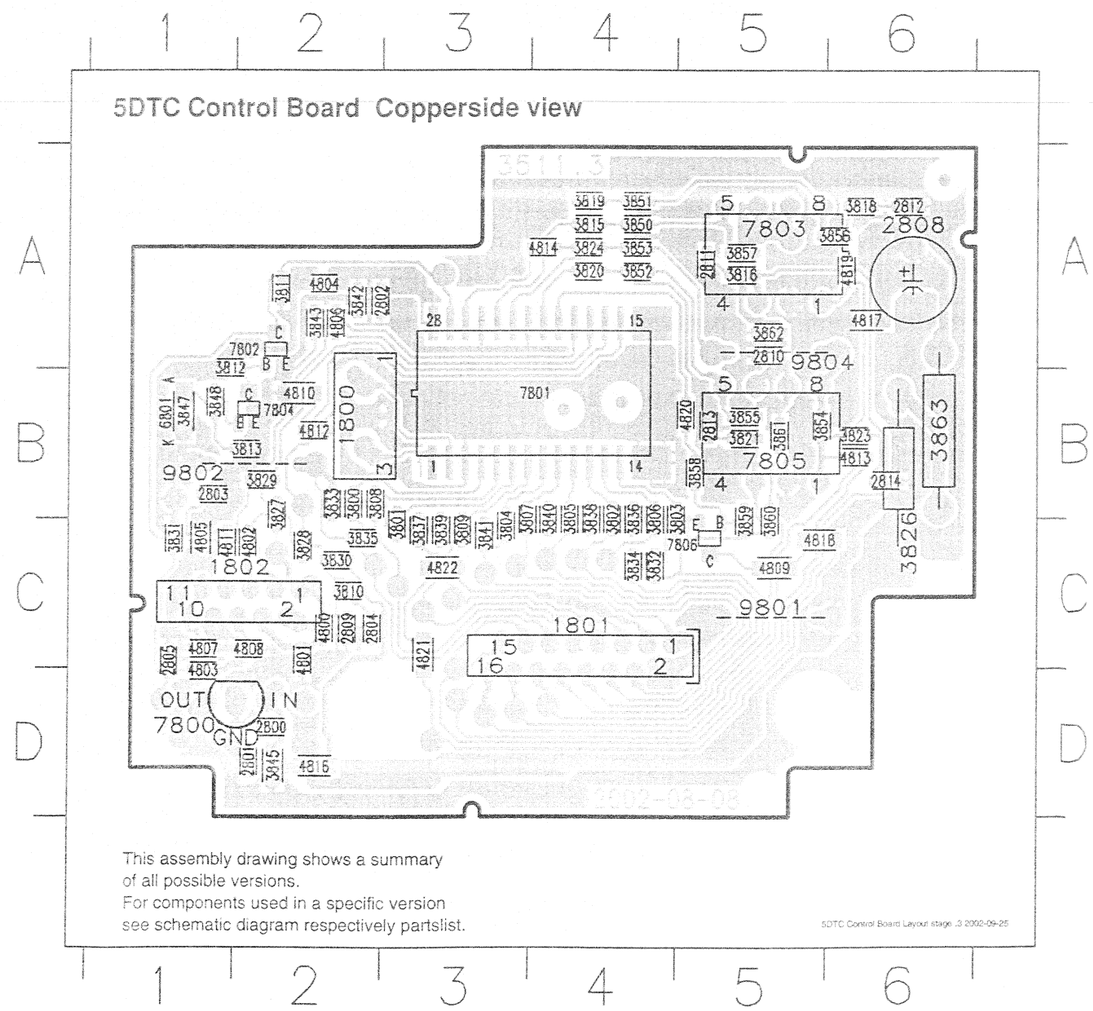

10-5

Exploded view 5DTC mechanic - for orientation only

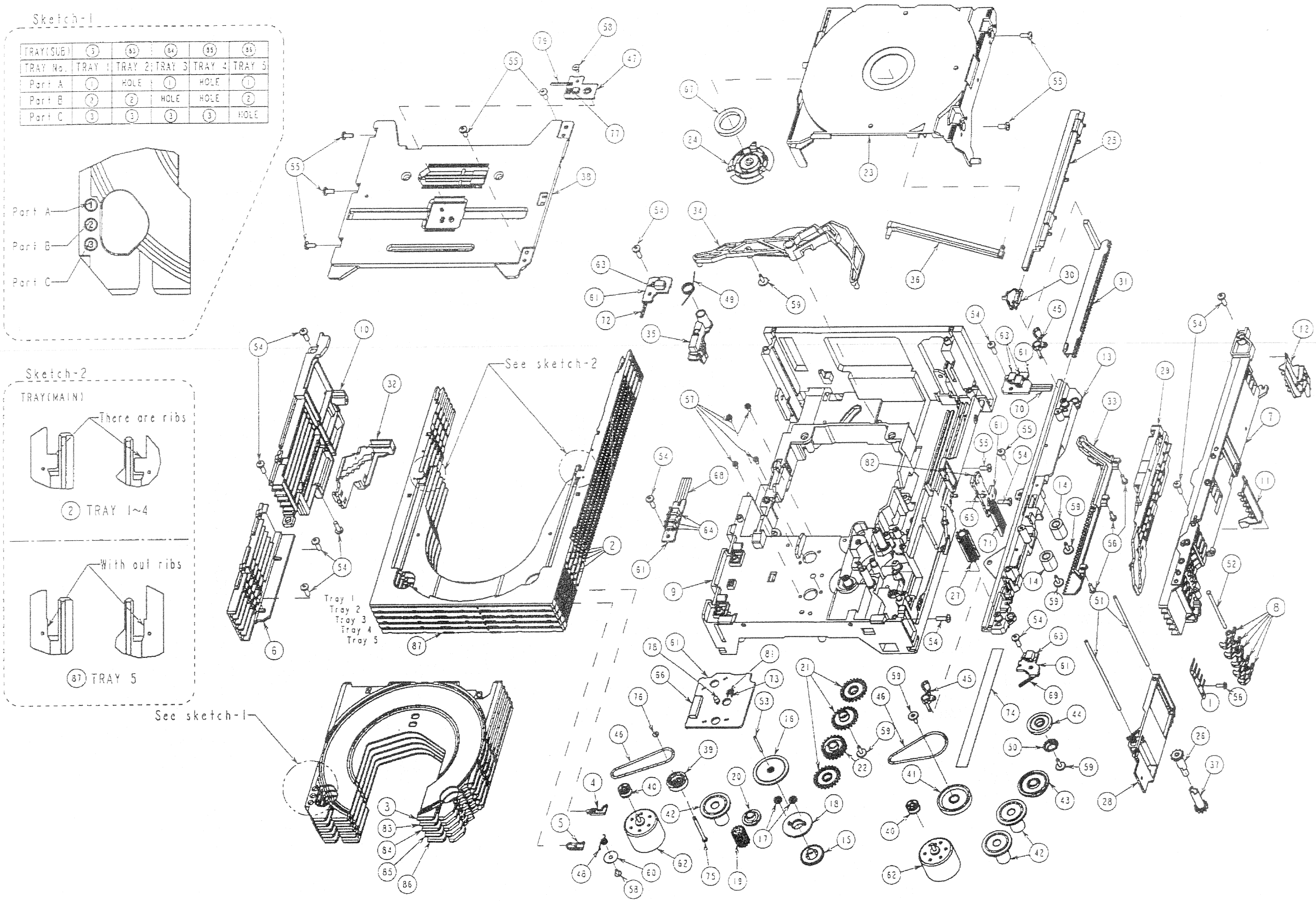

DVD MODULE COMPONENTS

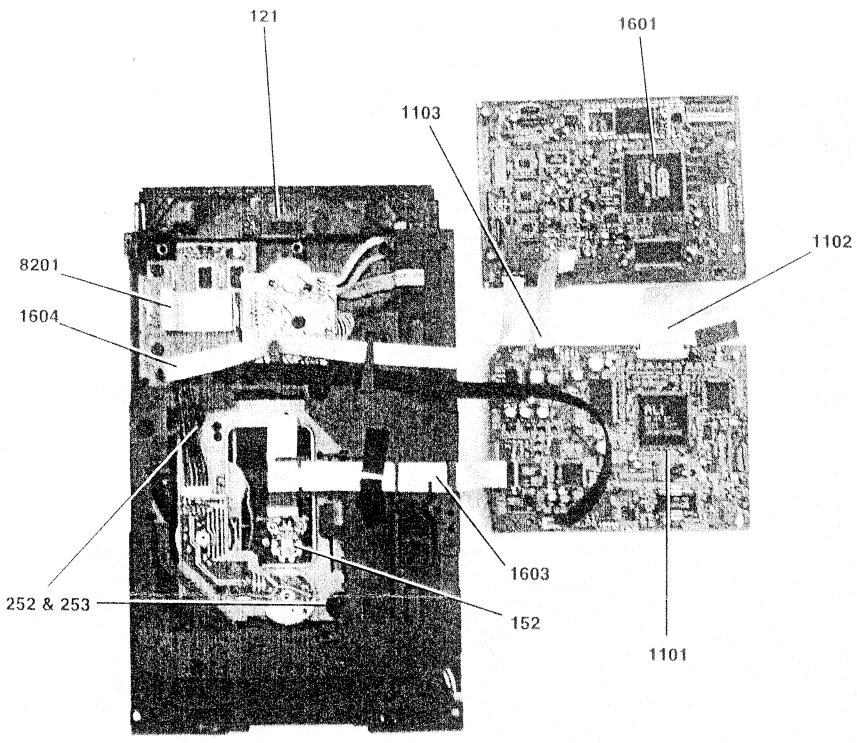

DVD MODULE PARTS LIST

121	3103 308 54710	5DTC Mechanism w/o Electronics
152	3139 119 00311	DVD Mechanism Sanyo-DV33SS
252	3139 113 27501	Damper-Rubber (50 Degrees)
253	3139 113 27501	Damper-Rubber (50 Degrees)
1101	3139 118 56941	Mono FE Board Assy CD222 FE
1102	3139 111 02151	FFC Cable 40P 10cm BD
1103	3139 111 02141	FFC Cable 7P 10cm BD
1601	3139 118 56481	Mono BE Board Assy CD222 P
1601	3139 118 56471	Mono BE Board Assy CD222 PM
1601	3139 118 56461	Mono BE Board Assy CD222 PMK
1603	3139 111 01671	FFC Cable 24P 21cm AD
1604	3139 110 35620	FFC Cable 8P 25cm BD
8021	3103 308 93110	FFC Cable 16P 6cm AD

Note: Only the parts mentioned in this list are normal service spare parts.

Notes:

For Mono FE and Mono BE pc board assembly electrical parts please refer to Chapter 11 and 12.

ELECTRICAL PARTS LIST - CONTROL BOARD

MISCELLANEOUS

1800	4822 242 72066	Ceram Filter 8MHz
1801	2422 025 17065	FFC Connector 16Pin Vert.
1802	2422 025 17788	FFC Connector 8Pin Vert.

CAPACITORS

2800	4822 126 13879	220nF +80/-20% 16V
2801	2238 586 59812	100nF 10% 50V
2802	2238 586 59812	100nF 10% 50V
2803	2238 586 59812	100nF 10% 50V
2808	4822 124 40433	47uF 20% 25V
2810	3198 017 34730	47nF 10% 16V
2811	2238 586 59812	100nF 10% 50V
2812	2238 586 59812	100nF 10% 50V
2813	2238 586 59812	100nF 10% 50V
2814	2238 586 59812	100nF 10% 50V

RESISTORS

3800	4822 051 30472	4k7 5% 0,062W
3801	4822 051 30472	4k7 5% 0,062W
3802	4822 051 30472	4k7 5% 0,062W
3803	4822 051 30472	4k7 5% 0,062W
3804	4822 051 30472	4k7 5% 0,062W
3805	4822 051 30472	4k7 5% 0,062W
3806	4822 051 30472	4k7 5% 0,062W
3807	4822 051 30472	4k7 5% 0,062W
3808	4822 051 30472	4k7 5% 0,062W
3809	4822 051 30472	4k7 5% 0,062W
3810	4822 051 30103	10k 5% 0,062W
3811	4822 051 30154	150k 5% 0,062W
3815	5322 117 13057	820R 1% 0,063W
3816	4822 051 30479	47R 5% 0,062W
3818	4822 051 30479	47R 5% 0,062W
3819	5322 117 13057	820R 1% 0,063W
3820	5322 117 13057	820R 1% 0,063W
3821	4822 051 30479	47R 5% 0,062W
3823	4822 051 30479	47R 5% 0,062W
3824	5322 117 13057	820R 1% 0,063W
3826	4822 052 10228	2R2 5% 0,33W
3827	4822 051 30101	100R 5% 0,062W
3828	4822 051 30101	100R 5% 0,062W
3829	4822 051 30101	100R 5% 0,062W
3830	4822 051 30103	10k 5% 0,062W
3831	4822 051 30103	10k 5% 0,062W
3832	4822 051 30272	2k7 5% 0,062W
3833	4822 051 30272	2k7 5% 0,062W
3834	4822 051 30272	2k7 5% 0,062W
3835	4822 051 30272	2k7 5% 0,062W
3836	4822 051 30272	2k7 5% 0,062W
3837	4822 051 30272	2k7 5% 0,062W
3838	4822 051 30103	10k 5% 0,062W
3839	4822 051 30272	2k7 5% 0,062W
3840	4822 051 30272	2k7 5% 0,062W
3841	4822 051 30103	10k 5% 0,062W
3842	4822 051 30103	10k 5% 0,062W
3845	4822 051 20159	15R 5% 0,1W
3850	4822 117 12706	10k 1% 0,063W
3851	4822 117 12706	10k 1% 0,063W
3852	4822 117 12706	10k 1% 0,063W
3853	4822 117 12706	10k 1% 0,063W
3854	4822 117 12706	10k 1% 0,063W
3855	4822 117 12706	10k 1% 0,063W
3856	4822 117 12706	10k 1% 0,063W
3857	4822 117 12706	10k 1% 0,063W
3858	4822 051 30102	1k 5% 0,062W
3859	4822 051 30103	10k 5% 0,062W
3860	5322 117 13017	100R 1% 0,063W
3861	2322 704 62002	2k 1% 0,063W
3862	4822 117 12706	10k 1% 0,063W
3863	4822 053 10228	2R2 5% 1W
4800	4822 051 30008	0R Jumper 0603
4802	4822 051 30008	0R Jumper 0603
4803	4822 051 30008	0R Jumper 0603
4804	4822 051 30008	0R Jumper 0603
4805	4822 051 20008	0R Jumper 0805
4806	4822 051 30008	0R Jumper 0603
4807	4822 051 30008	0R Jumper 0603
4808	4822 051 30008	0R Jumper 0603
4809	4822 051 20008	0R Jumper 0805
4810	4822 051 20008	0R Jumper 0805
4811	4822 051 30008	0R Jumper 0603
4812	4822 051 30008	0R Jumper 0603
4813	4822 051 30008	0R Jumper 0603
4814	4822 051 30008	0R Jumper 0603
4816	4822 051 20008	0R Jumper 0805
4817	4822 051 20008	0R Jumper 0805
4818	4822 051 20008	0R Jumper 0805
4819	4822 051 30008	0R Jumper 0603
4820	4822 051 30008	0R Jumper 0603
4821	4822 051 20008	0R Jumper 0805
4822	4822 051 20008	0R Jumper 0805

TRANSISTORS & INTEGRATED CIRCUITS

7800	4822 209 72042	MC78L05ACP, Stabilizer
7801	9322 150 41668	TMP87P809M Microcontroller
7803	4822 209 62059	TCA0372DP1, 2-Fold Op-Amp.
7805	4822 209 62059	TCA0372DP1, 2-Fold Op-Amp.
7806	3198 010 42320	BC857BW

Note: Only the parts mentioned in this list are normal service spare parts.

MONO-FE BOARD

TABLE OF CONTENTS

M29F002BT 11-1
M5705 (Ali) Chip 11-2
SP3721A Internal Block Diagrm 11-5
Top View - SMD & Component layout 11-6
Bottom View - Component layout 11-7
Servo Ampliers & Motor Drives Circuit Diagram 11-8
CD/DVD ROM Controller Circuit Diagarm 11-9
Electrical parts list 11-10

M29F002BT

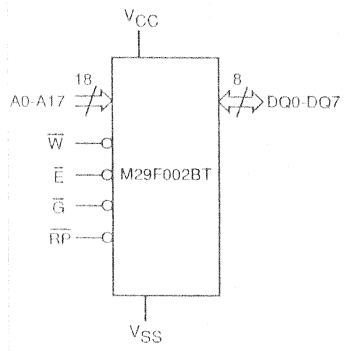

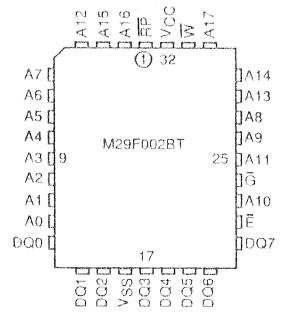

Function Description

A0-A17	Address Inputs
DQ0-DQ7	Data Inputs/Outputs
$\overline{E}$	Chip Enable
$\overline{G}$	Output Enable
$\overline{W}$	Write Enable
$\overline{RP}$	M29F002BT, M29F002BB: Reset/Block Temporary Unprotect M29F002BNT, M29F002BNB: Not Connected Internally
V_{CC}	Supply Voltage
V_{SS}	Ground

M5705 Pins Descriptions

Pin Name	Pin No.	Type	Description
Servo Data Slicer Interface Pins			
XSRFIN	2	I / A	Analog RF signal input after passing through the equalizer.
XSIPIN	3	I / A	Inverting input pin of data slicer.
XSDSSLV	5	O / A	Slice level output pin.
XSRSLINT	6	I / A	Reference current setting pin for analog data slicer.
Servo DAC Interface Pins			
XSAWRC	8	O / A	Output for enlarge VCO range. Analog output from DAC buffer.
XSRFGC	9	O / A	RF gain control output.
XSEFGC	10	O / A	E,F gain control output.
XSFOCUS	11	O / A	Output voltage level for focusing buffer IC.
XSTRACK	12	O / A	Output voltage level for tracking buffer IC.
XSSLEG	13	O / A	Output voltage level for sledge buffer IC.
XSMOTOR	15	O / A	Output voltage level for spindle motor buffer IC.
Servo Comparator Interface Pins			
XSRFRPLP	17	I / A	High bandwidth low pass filter input for RFRP.
XSTELP	18	I / A	High bandwidth low pass filter input for TE.
Servo ADC Interface Pins			
XSVREF2	19	I / A	2.1V reference voltage input.
XSRFRP	20	I / A	RF ripple/envelope signal input.
XSTEXI	21	I / A	Tracking zero crossing input signal.
XSTEI	23	I / A	Tracking error input signal.
XSFEI	24	I / A	Focus error input signal.
XSCEI	25	I / A	1. Center error input signal. 2. Photo Interrupt Input.
XSSBAD	27	I / A	Sub-beam addition signal input.
Servo PLL Interface Pins			
XSPDIREF	166	I / A	Phase detector reference current generator. Connect a resistor between this pin and ground to set reference current.
XSFDIREF	167	I / A	Frequency detector reference current generator. Connect a resistor between this pin and ground to set reference current.
XSPLLFTR2	169	I / A	Data PLL loop filter pin #2.
XSFDO	171	O / A	Output node of frequency detector charge pump circuit.
XSFTROPI	172	I / A	Input node of loop filter OP circuit.
XSVR_PLL	173	I / A	PLL reference voltage input.
XSPDOFTR2	174	I / A	Phase detector filter pin #1.
XSVREFO	175	O / A	Reference voltage output.
XSAWRCVCO	176	I / A	Auto Wide Range ControlVCO input pin. For enlarge VCO range in CAV mode.
Servo Control Interface Pins			
XSDFCT	29	I	Defect detection signal input.
XSCSJ	30	O	Chip select signal for accessing control registers.
XSCLK	31	O	Clock output for accessing control registers.
XSDATA	32	I/O	Registers data input/output pin.
XSLDC	33	O	Laser diode on/off control output for both CD/DVD.
XSFGIN	34	I	Motor Hall sensor input.
XSSPDON	35	O	Spindle motor on output.
XSFLAG[3:0]	36,37, 38,39	O	These pins are used to monitor some status of servo control block.

Pin Name	Pin No.	Type	Description
Microcontroller Interface Pins			
XGPIO[2:0]	48,51,52	I/O	1. These pins are used as general purpose I/O bus. 2. When use internal microcontroller, XGPIO[2] can be used as programmable I/O port 3.6.
XMP1_7	40	I/O	Internal microcontroller programmable I/O port 1.7.
XMP1_6	41	I/O	Internal microcontroller programmable I/O port 1.6.
XMP1_5	43	I/O	***This pin is now changed to be NC.***
XMP1_4	44	I/O	Internal microcontroller programmable I/O port 1.4.
XMP1_3	45	I/O	Internal microcontroller programmable I/O port 1.3.
XMP1_2	47	I/O	Internal microcontroller programmable I/O port 1.2.
XMP1_1	49	I/O	Internal microcontroller programmable I/O port 1.1.
XMP1_0	57	I/O	Internal microcontroller programmable I/O port 1.0. This pin is default used as the A16 (microcontroller address line 16).
XMFSCSJ	46	I/O	Output chip select connected to external flash ROM chip enable pin.
XMPSENJ	54	I/O	Output program store enable connected to external ROM PSENJ pin.
XMALE	56	I/O	This signal is used as address latch signal in address/data mux mode.
XMCSJ	70	I/O	1. This signal must be asserted for all microcontroller accesses to the registers of this chip. 2. When use internal microcontroller, this signal can be used as programmable I/O port 3.1.
XMRDJ	71	I/O	1. This signal is used as the Read Strobe signal. 2. When use internal microcontroller, this signal can be used as programmable I/O port 3.0.
XMWRJ	72	I/O	This signal is used as the Write Strobe signal.
XMINT1J	73	I/O	1. This signal is an interrupt line to the microcontroller. 2. When use internal microcontroller, this signal can be used as programmable I/O port 3.7.
XMA[15:0]	91, 90, 89, 87, 74, 75, 77, 78, 79, 80, 81, 82, 83, 84, 85, 86	I/O	These pins are used as address bus.
XMD[7:0]	69, 68, 67, 66, 65, 64, 63, 62	I/O	These pins are used as data bus for the 16-bit processor mode, or the address/data mux bus for the 8-bit processor mode.
Miscellaneous Pins			
XTPLCK	163	I/O	**PLCK test pin.**
XTSLRF	164	I/O	**SLRF test pin.**
XOSC1	59	I	**Crystal input/ System clock**. The input frequency from outside crystal or oscillator is 33.8688Mhz.
XOSC2	60	O	**Crystal output.**
XCRSTJ	53	I	**Chip Reset**. An asserted lowinput generates a component reset that stops all operations within the chip and deasserts all output signals. All input/output signals are set to input.

M5705 (Ali) Features

Data Separator

- Built-in data slicer and data PLL for data recovery from RF signal.
- Supports digital/analog slice level adjustment.
- Built-in auto calibration function.
- Built-in auto wire range control function.

DVD-DSP

- Built-in synchronous pattern/ID detection /protection/separation.
- Built-in EFM+ (8 to 16) demodulation circuit.
- Built-in high performance RSPC ECC circuit.
- Supports up to 6X DVD-ROM system with ECC correcting "on the fly".
- Built-in descrambler/EDC circuit.

CD-DSP

- Synchronous pattern detection, protection and interpolation.
- Built-in EFM demodulation circuit, subcode demodulation circuit.
- Dual C1 correction and quadrule C2 correction.
- Subcode Q data can output with audio data synchronously.

Digital Servo

- Built-in A/D and D/A converters for servo control signals processing.
- Built-in digital controller for focus, tracking servo control of CD/DVD systems.
- Built-in CLV/CAV auxiliary function for spindle servo control.
- Built-in "Seek Sensor" auxiliary circuit for seek control.
- Automatic adjustment of focus servo and tracking servo, for loop gain, offset and balance.
- Built-in RF gain automatic adjustment function.
- Built-in AFC circuit and APC circuit for CLV and AFC circuit for CAV spindle servo of CD/DVD systems.
- Built-in defect and shock protection function.

DRAM Interface

- Supports up to 16 Mb EDO DRAM and SDRAM.
- Separate buffer address pointers and automatic address calculation that save firmware effort.
- *Read-ahead cache scheme for multimedia* isochronous transfer.
- Protection logic preventing uncorrected sectors being released to the host.

Target Search

- Built-in target sector searching circuit for auto-searching the target sector.
- Automatic data buffering after the target sector has been located.

C3 ECC/EDC

- Programmable Reed-Solomon Product Code (RSPC) that allows different error correction schemes for CD-ROM.
- Built-in On-chip EDC function.
- Support up to 32X CD-ROM system with ECC correcting "on the fly".

Host Interface

- Supports ATA PIO mode 4 timing
- Supports Multiword DMA mode 2 timing
- Compliant with SFF-8020(ATAPI) 2.5, ATA 3(Overlapping feature), and SFF-8090 (ATAPI for DVD) standard
- High current drivers with slew rate control for direct connecting to the ATA bus and noise immunity.
- Automatic Read Control Circuit for host data transfer.
- Automatic wake up from power down on host reset or command write
- Automatic sequence for packet command receiving and Automatic updating of the host task file registers
- Supports ATAPI write command that can let user update firmware from PC.
- Built-in authentication circuit for copy protection.
- Multiplexed MPEG decoder interface (local bus).

Microcontroller Interface

- Embedded microcontroller compatible with Intel 8032 command set
- Supports Intel 8032 series MCUs
- Supports Intel 8032 series MCUs and Hitachi H8 series MCUs.
- Supports automatically download firmware function directly from ATAPI interface to flash memory
- Supports "on-system" upgrade flash memory function from CD-R discs or ATAPI interface
- High speed register (buffer RAM) access to meet the requirement of high performance system
- Supports Direct mapped access to the buffer RAM using ready bit handshaking

M5705 (Ali) Application

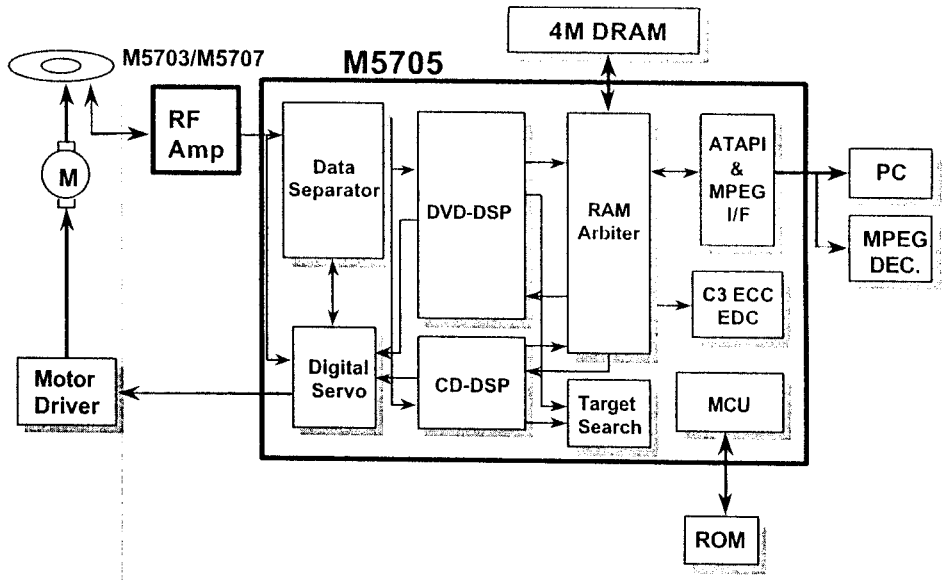

M5705 Pins Descriptions

Pin Name	Pin No.	Description
Power Pins		
AVDD5_DS	4	Analog Power +5V for Data Slicer part.
AVDD5_DA	14	Analog Power +5V for DAC part.
AVDD5_AD	26	Analog Power +5V for ADC part.
AVDD5_PL	168	Analog Power +5V for Data PLL part.
VDD	7,55,58, 76,115, 146,150, 162	Power + 3.3V for digital core logic and pad.
AVSS_DS	1	Analog Ground for Data Slicer part.
AVSS_DA	16	Analog Ground for DAC part.
AVSS_AD	22	Analog Ground for ADC part.
AVSS_PL	170	Analog Ground for Data PLL part.
GND	28,42,61, 88,110, 130,138, 154,165	Digital Ground for core logic and pad.

SP32721A Internal Block Diagram

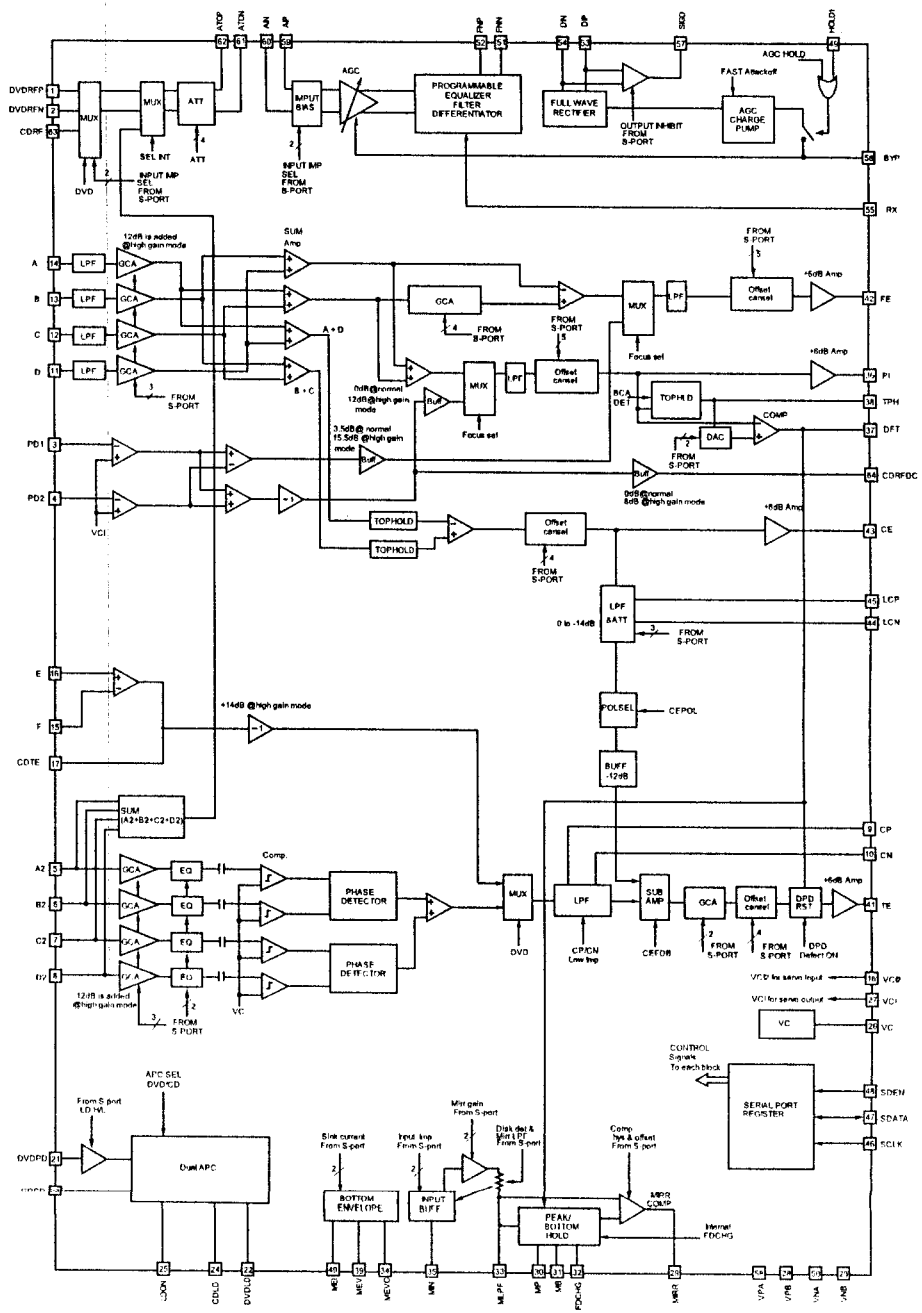

M5705 Pins Descriptions

Pin Name	Pin No.	Type	Description
Host Interface Pins			
XHCS1J	94	I	This pin is used to select the command block task file registers.
XHCS3J	93	I	This pin is used to select the control block task file registers.
XHIORJ	103	I	Asserted by the host during a host I/O read operation.
XHIOWJ	104	I	Asserted by the host during a host I/O write operation.
XHDRQ	105	O	**1. DMA request**. This pin is configured as the DMA request signal, and is used during DMA transfer between the host and the controller. This pin is tri-stated when DMA transfers are not enabled. **2. MPEG acknowledge**. This pin is used as the ACKJ signal when MPEG interface mode is selected.
XHDACKJ	101	I	**1. DMA acknowledge**. This pin is configured as DACKJ, and is used as the DMA acknowledge signal during DMA data transfers. **2. MPEG request**. This pin is used as the REQ signal when MPEG interface mode is selected.
XHCS16J	99	O	**1. 16-bit data select**. This signal indicates that a 16-bit data transfer is active on the host data bus. This pin is open-drain tri-state output. **2. MPEG clock**. This pin is used as the CLOCK signal when MPEG interface mode is selected.
XHRSTJ	50	I	**Host Reset.** The reset of ATA bus
XHINT	100	O	**1. Host interrupt request**. This tri-state pin is the host interrupt request, and is asserted to indicate to the host that the controller needs attention. **2. MPEG begin**. This pin is used as the BEGIN signal when MPEG interface mode is selected.
XHPDIAGJ	97	I/O	This pin is used as the Passed Diagnostics signal, and may be an input or an open-drain output.
XHDASPJ	92	I/O	This pin is used as the Drive Active/ Slave Presentsignal, and is an input or an open-drain output. This pin is used for Master/Slave drive communication and/or for driving an LED.
XHIORDY	102	O	**1. I/O channel ready.** This signal is driven low to extend host transfer cycles when the controller is not ready to respond. This pin will be tri-stated when a read or write is not in progress. **2. MPEG error**. This pin is used as the ERROR signal when MPEG interface mode is selected.
XHA[2:0]	95, 98, 96	I	**Host address lines.** The host address lines A[2:0] are used to access the various host control, status, and data registers.
XHD[15:0]	106, 108, 111, 113, 116, 118, 120, 122, 123, 121, 119, 117, 114, 112, 109, 107	I/O	**1. Host data bus**. This bus is used to transfer data and status between the host and the controller. **2. MPEG data bus 7-0**. The HD[7:0] are used as the DATA[7:0] when MPEG interface mode is selected. **3. VCD I/F.** Bit3-0 are used as VCD I/F signal when VCD function is enabled. The relationship of bit3-0 and VCD I/F is as follow. HD0 → CD-DATA HD1 → CD-LRCK HD2 → CD-BCK HD3 → CD-C2PO

Pin Name	Pin No.	Type	Description
RAM Interface Pins			
XRSDCLK	143	O	This signal is the clock output for SDRAM.
XROEJ	147	O	This signal is used as the memory output enable for external DRAM buffers. After RSTJ is asserted, this signal will be low.
XRWEJ	142	O	This signal is asserted low when a buffer memory write operation is active.
XRRASJ	144	O	This signal is used as Row address output to external DRAM buffer. After RSTJ is asserted, this signal will be high.
XRCASJ	145	O	This signal is used as column address output to external DRAM. After RSTJ is asserted, this signal will be high.
XRA[11:0]	151, 152, 148, 149, 153, 155, 156, 157, 161, 160, 159, 158	O	**1. RAM address lines**. These are bits 11-0 for addressing the buffer memory. **2. Hardware setting**. The bits 6-0 are used as hardware setting for some functions. RA[9] : FLASH size is 64K/128K 1 : FLASH size is 64K. 0 : FLASH size is 128K. RA[8] : External CPU is 8032/H8 1 : 8032 0 : H8 RA[7] : Microcontroller programmable I/O port 1 pin control 1 : By internal microcontroller. 0 : By registers to decide input/output. RA[6] : System testpin output. 1 : Normal operation. 0 : System test pin output. RA[5] : For testing purpose, don't need to set RA[4] : IDE master/slave. 1 : Slave. 0 : Master. RA[3] : For testing purpose, don't need to set RA[2] : For testing purpose, don't need to set RA[1-0] : MCU Mode selection. 11 : Normal Mode (internal uP,internal address latch). 10 : Outside uP Mode (ICE Mode). 01 : Test mode for internal uP testing. 00 : Internal uP mode with external address latch.
XRD[15:0]	124, 126, 128, 131, 133, 135, 137, 140, 141, 139, 136, 134, 132, 129, 127, 125	I/O	These signals are the 8-bit parallel data lines to/from the buffer memory.

BOTTOM VIEW - COMPONENT LAYOUT

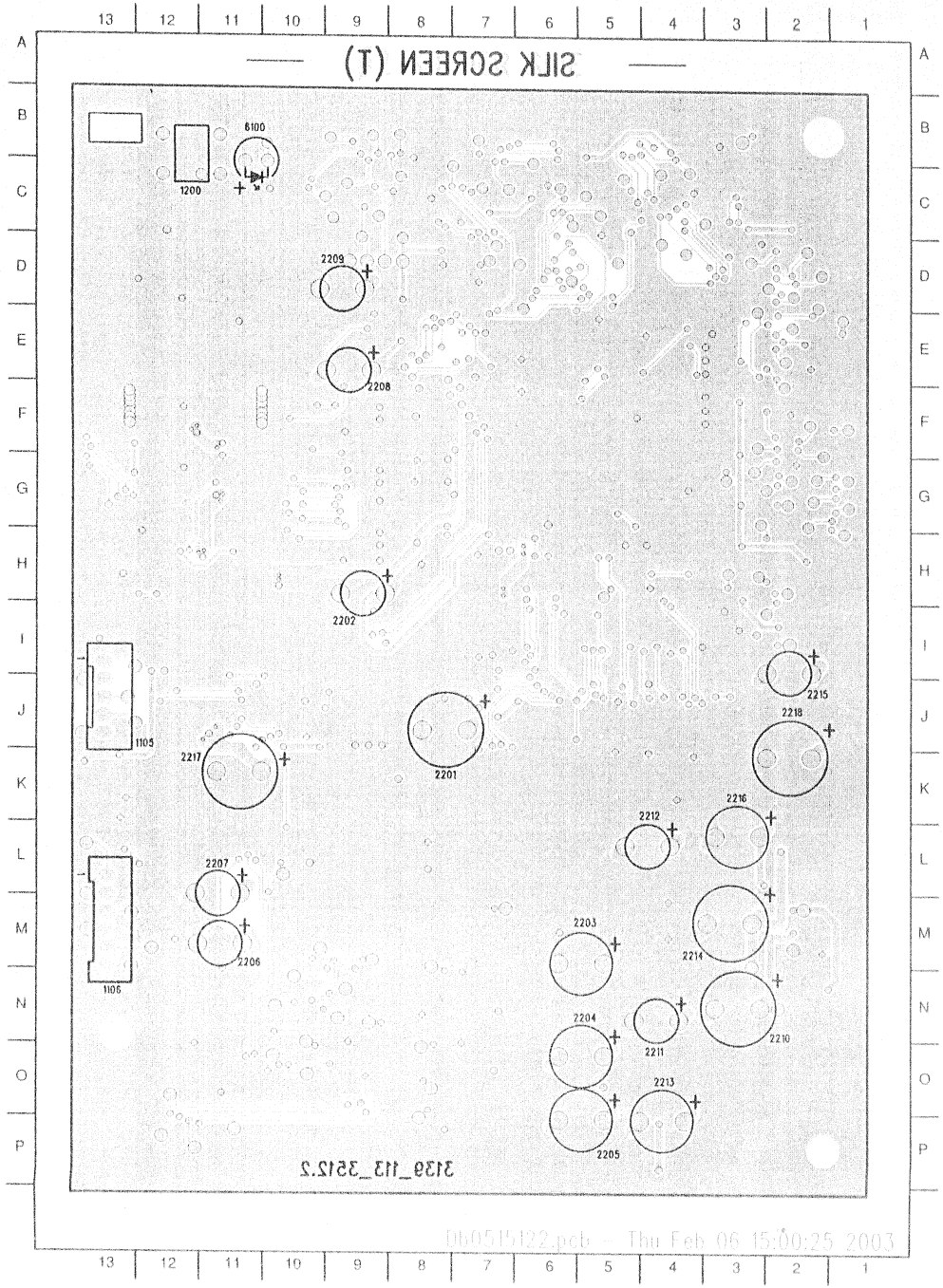

1105	I13
1106	M13
1200	B11
2201	J8
2202	H9
2203	M6
2204	O6
2205	O6
2206	M11
2207	L11
2208	E9
2209	D9
2210	N3
2211	N5
2212	L5
2213	O4
2214	M4
2215	I3
2216	K3
2217	J11
2218	J3
6100	B10

11-7

11-6

TOP VIEW - SMD & COMPONENT LAYOUT

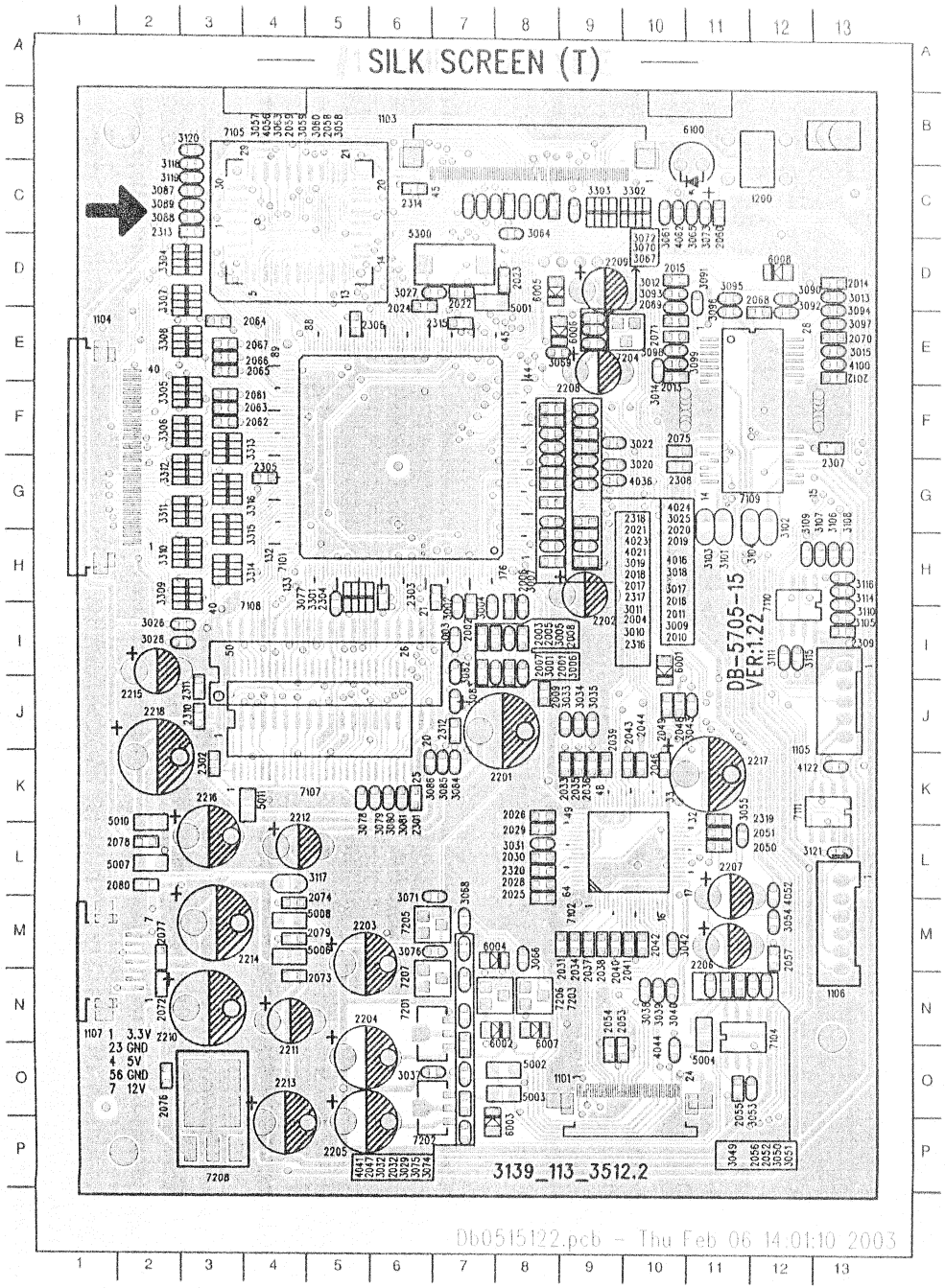

1101	O9	2310	J3	3301	H6
1102	G9	2311	I3	3302	C10
1103	B8	2312	J7	3303	C9
1104	F2	2313	C3	3304	C3
1105	I13	2314	B6	3305	E3
1106	M13	2315	D7	3306	F3
1107	M2	2316	G8	3307	D3
1200	B11	2317	G8	3308	D3
2001	I8	2318	E8	3309	H3
2002	H7	2319	K11	3310	G3
2003	I7	2320	L8	3311	G3
2004	G8	3001	I8	3312	F3
2005	I8	3002	H7	3313	F4
2006	H8	3003	I7	3314	H4
2007	I7	3004	H7	3315	G4
2008	I8	3005	I8	3316	F4
2009	I8	3006	I8	4016	F9
2010	G9	3007	H8	4021	F8
2011	G9	3009	G9	4023	F8
2012	E12	3010	G8	4024	E9
2013	E10	3011	G8	4036	F9
2014	D12	3012	D10	4041	P7
2015	C10	3013	D12	4044	N10
2016	G9	3014	E10	4052	L12
2017	F8	3015	D12	4056	B7
2018	F8	3017	F9	4062	C10
2019	F9	3018	F9	4100	E12
2020	F9	3019	F8	4122	J12
2021	E8	3020	F9	5001	D7
2022	D7	3022	F9	5002	O8
2023	D8	3025	E9	5003	O8
2024	D7	3026	H3	5004	N11
2025	L8	3027	D7	5006	M5
2026	K8	3028	I3	5007	L3
2028	L8	3029	N7	5008	M5
2029	K8	3031	K8	5010	K3
2030	L8	3032	O7	5011	K4
2031	M8	3033	J9	5300	C7
2032	N7	3034	J9	6001	I10
2033	J9	3035	J9	6002	N8
2034	M9	3037	O7	6003	O7
2035	J9	3038	N10	6004	M8
2036	J9	3039	N10	6005	D8
2037	M9	3040	N10	6006	D8
2038	M9	3042	M10	6007	N8
2039	J9	3043	J10	6008	C12
2040	M9	3049	M11	6100	B10
2041	M9	3050	M11	7101	F6
2042	M10	3051	M11	7102	L9
2043	J9	3053	O11	7104	N11
2044	J10	3054	M12	7105	C5
2046	J10	3055	K11	7107	J5
2047	O7	3057	B7	7108	I5
2048	J10	3058	C9	7109	E11
2049	J10	3059	B8	7110	H12
2050	L11	3060	B8	7111	K12
2051	K11	3061	C10	7201	N7
2052	M11	3063	B8	7202	O7
2053	N9	3064	C8	7203	N8
2054	N9	3065	C10	7204	D9
2055	O11	3066	M8	7205	M7
2056	M11	3067	D9	7206	N8
2057	M12	3068	M7	7207	M7
2058	B8	3069	E8	7208	O3
2059	B8	3070	D9		
2060	C11	3071	L7		
2061	E4	3072	D9		
2062	F4	3073	C11		
2063	E4	3074	M7		
2064	D4	3075	M7		
2065	E4	3076	M7		
2066	E4	3077	H5		
2067	D4	3078	K6		
2068	D11	3079	K6		
2069	D10	3080	K6		
2070	D12	3081	K6		
2071	D10	3082	I7		
2072	M9	3083	I7		
2073	M5	3084	J7		
2074	L5	3085	J7		
2075	F10	3086	J7		
2076	O3	3087	B3		
2077	M3	3088	C3		
2078	K2	3089	B3		
2079	M5	3090	D12		
2080	L2	3091	D10		
2201	J8	3092	D12		
2202	H9	3093	D10		
2203	M6	3094	D12		
2204	O6	3095	D11		
2205	O6	3096	D11		
2206	M11	3097	D12		
2207	L11	3098	D10		
2208	E9	3099	E10		
2209	D9	3101	G11		
2210	N3	3102	G11		
2211	N5	3103	G11		
2212	L5	3104	G11		
2213	O4	3105	H13		
2214	M4	3106	G12		
2215	I3	3107	G12		
2216	K3	3108	G13		
2217	J11	3109	G12		
2218	J3	3110	H13		
2301	K6	3111	I12		
2302	J3	3114	H13		
2303	H7	3115	I12		
2304	H6	3116	H13		
2305	F4	3117	L5		
2306	D6	3118	B3		
2307	F12	3119	B3		
2308	F10	3120	B3		
2309	H13	3121	L13		

11-8

SERVO AMPLIFIERS & MOTOR DRIVERS CIRCUIT

1101 F2, 1106 D1, 1107 F1, 2025 C9, 2026 C10, 2028 C9, 2029 C10, 2030 C9, 2031 C8, 2032 I7, 2033 D11, 2034 D7, 2035 D11, 2036 D11, 2037 E6, 2038 E6, 2039 E11, 2040 E6, 2041 E7, 2042 E7, 2043 E11, 2044 F12, 2046 F11, 2047 I6, 2048 G11, 2049 G11, 2050 H10, 2051 H10, 2052 F14, 2053 G6, 2054 G7, 2055 H12, 2056 F14, 2057 F13, 2068 C1, 2069 C2, 2070 B2, 2071 C2, 2072 I1, 2073 I3, 2075 I2, 2076 I1, 2077 H1, 2079 I4, 2203 I6, 2204 I7, 2205 I6, 2206 H10, 2207 H10, 2210 I1, 2211 I3, 2213 I2, 2214 H1, 2217 I4, 2307 A4, 2308 A4, 2309 A8, 2319 H11, 2320 H11, 3029 I7, 3031 D9, 3032 I8, 3033 D12, 3034 D12, 3035 D12, 3037 I6, 3038 F7, 3039 F7, 3040 G7, 3042 G8, 3043 H11, 3049 H12, 3050 E14, 3051 F13, 3053 H12, 3054 F13, 3055 F12, 3066 G6, 3068 G8, 3071 H8, 3074 H7, 3075 H6, 3076 H7, 3090 D2, 3091 B1, 3092 D2, 3093 B2, 3094 A1, 3095 C1, 3096 C2, 3097 B2, 3098 C2, 3099 C1, 3101 B5, 3102 A5, 3103 B5, 3104 B5, 3105 A7, 3106 A8, 3107 A7, 3108 A9, 3109 A7, 3110 B7, 3111 B11, 3114 B7, 3115 A12, 3116 C7, 4036 E12, 4041 I8, 4052 F12, 4100 C2, 5002 I6, 5003 I5, 5004 G6, 5006 I3, 5008 I4, 6002 I7, 6003 I6, 6004 G6, 6007 H6, 6008 D2, 7102 E9, 7104-A I13, 7104-B F14, 7110-B A12, 7110A-A B8, 7201 I7, 7202 I6, 7203 G6, 7205 H8, 7206 H6, 7207 H7, 7208 I2

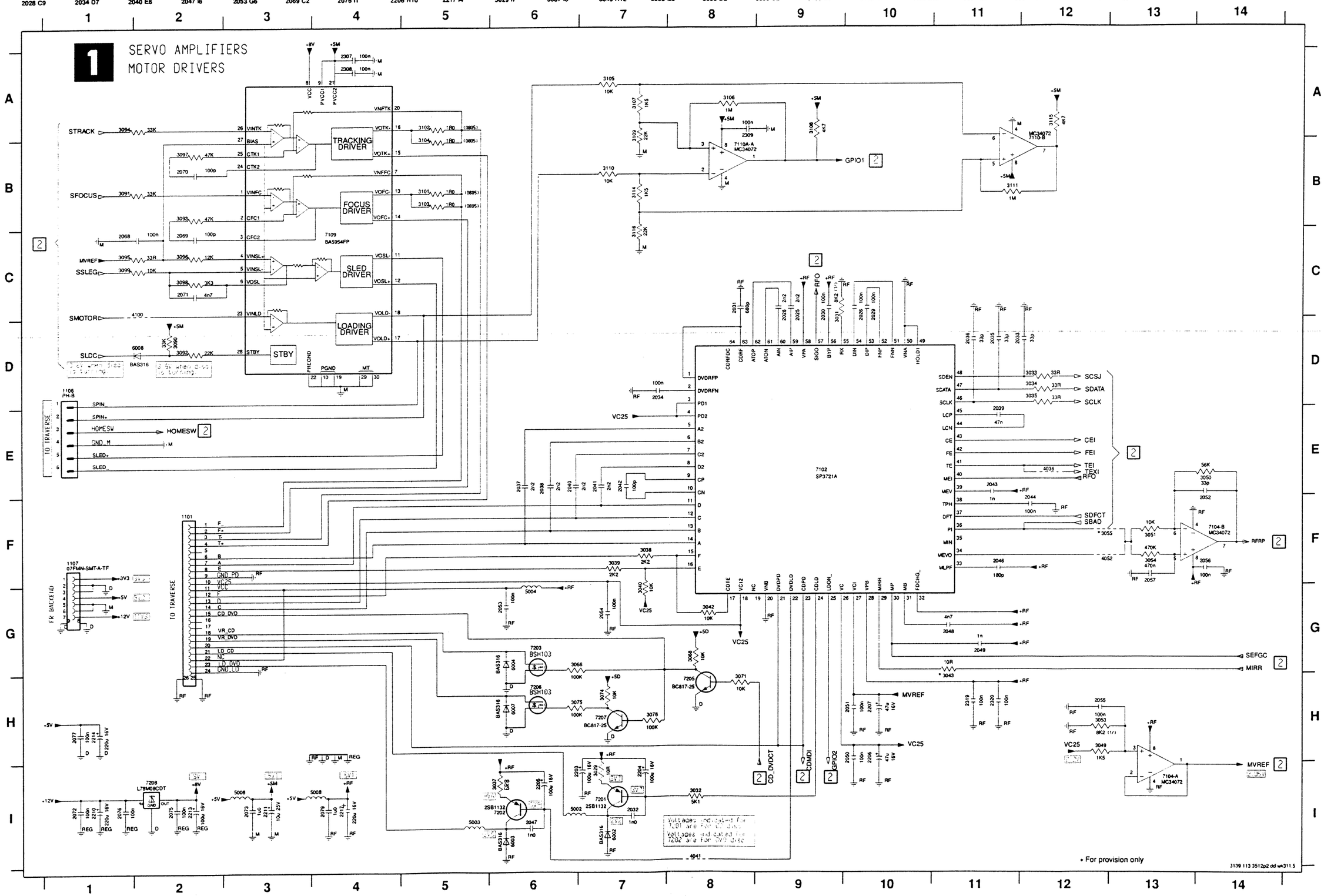

11-9

CD/DVD ROM CONTROLLER CIRCUIT

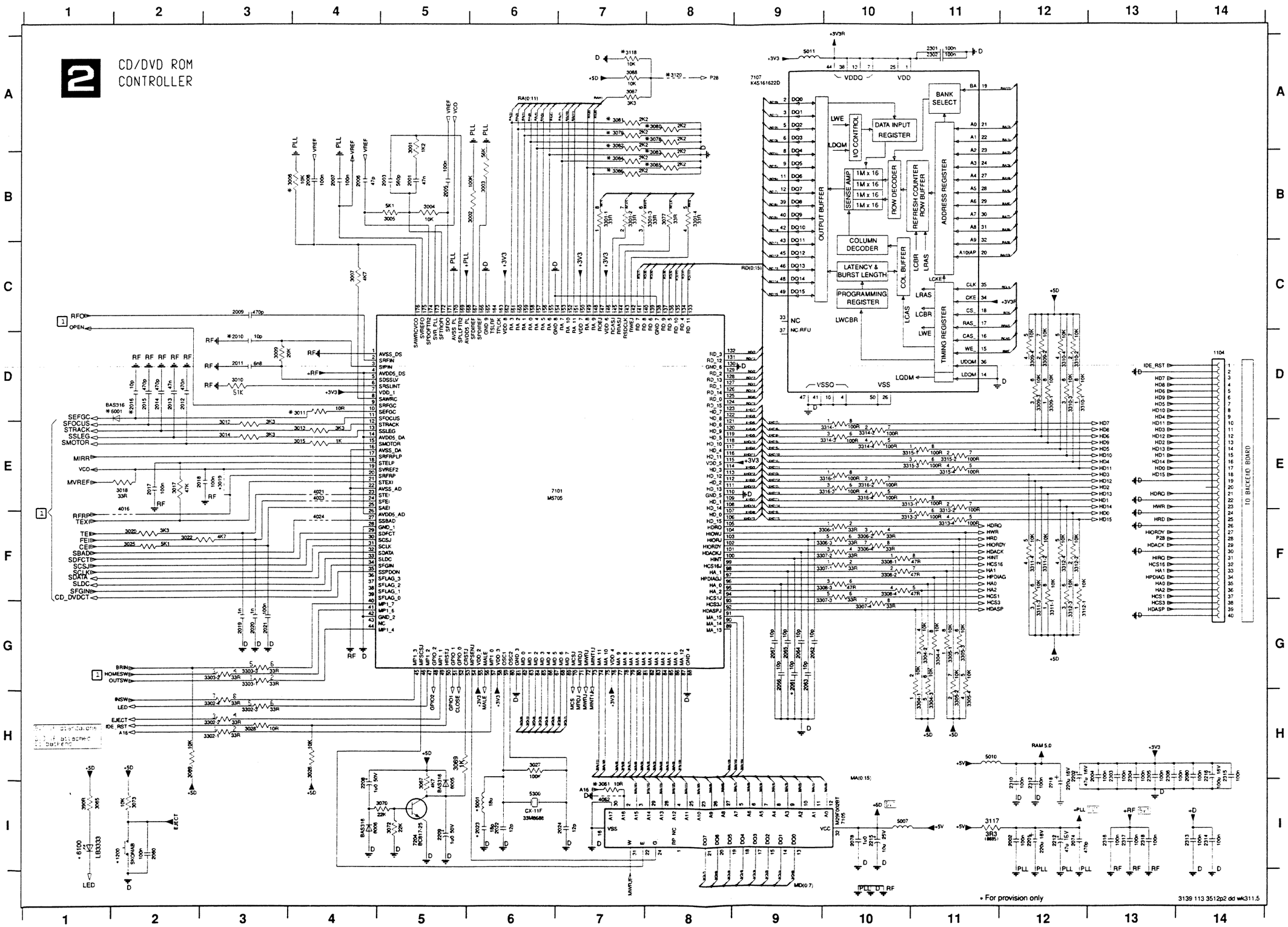

1104 D14	3304-1 G11
1200 I2	3304-2 G11
2001 B5	3304-3 G11
2002 I12	3304-4 G11
2003 B5	3305-1 G11
2004 H13	3305-2 H11
2005 B5	3305-3 G11
2006 B4	3305-4 H11
2007 B4	3306-1 F10
2008 B4	3306-2 F10
2009 C3	3306-3 F10
2010 D3	3306-4 F10
2011 D3	3307-1 F10
2012 D2	3307-2 F10
2013 D2	3307-3 G10
2014 D2	3307-4 G10
2015 D2	3308-1 F10
2016 D2	3308-2 F10
2017 E2	3308-3 F10
2018 E2	3308-4 F10
2019 G3	3309-1 D12
2020 G3	3309-2 D12
2021 G3	3309-3 D12
2022 I6	3309-4 D12
2023 I6	3310-1 D12
2024 I7	3310-2 D12
2060 I2	3310-3 D12
2061 G9	3310-4 D12
2062 G9	3311-1 G12
2063 G9	3311-2 F12
2064 G9	3311-3 G12
2065 G9	3311-4 F12
2066 G9	3312-1 G12
2067 G9	3312-2 F12
2074 I12	3312-3 G12
2078 I10	3312-4 F12
2080 H14	3313-1 E10
2201 I12	3313-2 F11
2202 H12	3313-3 F10
2208 I4	3313-4 F11
2209 I5	3314-1 E10
2212 I12	3314-2 E10
2215 I10	3314-3 E10
2216 H14	3314-4 E10
2218 I12	3315-1 E10
2301 A11	3315-2 E11
2302 A11	3315-3 E10
2303 H13	3315-4 E11
2304 H13	3316-1 E10
2305 H13	3316-2 E10
2306 H13	3316-3 E10
2310 I12	3316-4 E10
2312 I12	4016 F2
2313 I14	4021 E4
2314 I14	4023 E4
2315 H14	4024 F4
2316 I13	4062 I7
2317 I13	5001 I6
2318 I13	5007 I10
3001 A5	5010 H11
3002 B6	5011 A9
3003 B6	5300 I6
3004 B5	6001 D2
3005 B5	6005 I5
3006 B4	6006 I4
3007 C4	6100 I1
3009 D3	7101 E7
3010 D3	7105 I10
3011 D4	7204 I5
3012 E3	
3013 E4	
3014 E3	
3015 E4	
3017 E2	
3018 E2	
3019 E3	
3020 F2	
3022 F2	
3025 F2	
3026 H4	
3027 H6	
3028 H3	
3061 I7	
3065 I1	
3067 I5	
3069 H5	
3070 I5	
3072 I5	
3073 I2	
3077 B8	
3078 A8	
3079 A7	
3080 A8	
3081 A7	
3082 A7	
3083 B8	
3084 B7	
3085 B8	
3086 B7	
3087 A7	
3088 A7	
3089 H2	
3117 I11	
3118 A7	
3120 A8	
3301-1 B7	
3301-2 B7	
3301-3 B8	
3301-4 B8	
3302-1 H3	
3302-2 H3	
3302-3 H3	
3302-4 H3	
3303-1 G3	
3303-2 G3	
3303-3 G3	

ELECTRICAL PARTS LIST - MONO-FE BOARD

RESISTORS

3311	4822 117 13578	RES NETWORK 4 X 10k 5% 1206
3312	4822 117 13578	RES NETWORK 4 X 10k 5% 1206
3313	3198 031 11010	RST NETWORK 4 X 100R 5% 1206
3314	3198 031 11010	RST NETWORK 4 X 100R 5% 1206
3315	3198 031 11010	RST NETWORK 4 X 100R 5% 1206
3316	3198 031 11010	RST NETWORK 4 X 100R 5% 1206
4016	4822 051 30008	0R JUMPER 0603
4021	4822 051 30008	0R JUMPER 0603
4023	4822 051 30008	0R JUMPER 0603
4024	4822 051 30008	0R JUMPER 0603
4036	4822 051 30008	0R JUMPER 0603
4041	4822 051 30008	0R JUMPER 0603
4044	4822 051 30008	0R JUMPER 0603
4052	4822 051 30008	0R JUMPER 0603
4056	4822 051 30008	0R JUMPER 0603
4062	4822 051 30008	0R JUMPER 0603
4100	4822 051 30008	0R JUMPER 0603

COILS & FILTERS

5002	4822 157 71206	IND FXD 100MHZ 600R
5003	4822 157 71206	IND FXD 100MHZ 600R
5004	4822 157 71206	IND FXD 100MHZ 600R
5006	4822 157 71206	IND FXD 100MHZ 600R
5007	4822 157 71206	IND FXD 100MHZ 600R
5008	4822 157 71206	IND FXD 100MHZ 600R
5010	4822 157 71206	IND FXD 100MHZ 600R
5011	4822 157 71206	IND FXD 100MHZ 600R
5300	4822 242 10757	X'TAL RESONATOR 33,868MHZ 20P

DIODES

6002	4822 130 11397	BAS316
6003	4822 130 11397	BAS316
6004	4822 130 11397	BAS316
6005	4822 130 11397	BAS316
6006	4822 130 11397	BAS316
6007	4822 130 11397	BAS316
6008	4822 130 11397	BAS316

TRANSISTORS & INTEGRATED CIRCUITS

7101	9322 186 11671	M5705
7102	9322 185 60671	SP3721AAA0PM
7104	4822 209 32073	MC34072D
7105	9965 000 19029	M29F002BT-70K1 with SW program
7107	9322 159 55668	K4S161622D-TC70
7109	9322 187 63668	BA5954FP
7110	4822 209 32073	MC34072D
7201	4822 130 11565	2SB1132
7202	4822 130 11565	2SB1132
7203	9340 547 13215	BSH103
7204	4822 130 42804	BC817-25
7205	4822 130 42804	BC817-25
7206	9340 547 13215	BSH103
7207	4822 130 42804	BC817-25
7208	9322 163 24668	L78M08CDT

Note: Only the parts mentioned in this list are normal service spare parts.

ELECTRICAL PARTS LIST - MONO-FE BOARD

MISCELLANEOUS

	3139 118 56941	FE (Front End) PCB Assembly CD222
1101	2422 025 17529	FFC Socket 24P Hort.
1104	2422 025 17371	FFC Socket 40P Hort.
1107	2422 025 16806	FFC Socket 7P Hort.

CAPACITORS

2001	3198 017 34730	47nF 16V
2002	2238 586 59812	100nF 50V
2003	4822 126 14249	560pF 10% 50V
2004	2238 586 59812	100nF 50V
2005	2238 586 59812	100nF 50V
2006	4822 126 11785	47pF 5% 50V
2007	2238 586 59812	100nF 50V
2008	2238 586 59812	100nF 50V
2009	4822 126 13881	470pF 5% 50V
2011	5322 126 11582	6,8nF 10% 63V
2012	3198 017 44740	470nF 10V
2013	3198 017 34730	47nF 16V
2014	4822 126 13881	470pF 5% 50V
2015	4822 126 13881	470pF 5% 50V
2017	2238 586 59812	100nF 50V
2018	2238 586 59812	100nF 50V
2019	3198 016 31020	1nF 25V
2020	3198 016 31020	1nF 25V
2021	2238 586 59812	100nF 50V
2022	4822 126 11663	12pF 50V
2024	4822 126 11663	12pF 50V
2025	4822 126 14238	2,2nF 50V
2026	2238 586 59812	100nF 50V
2028	4822 126 14238	2,2nF 50V
2029	2238 586 59812	100nF 50V
2030	2238 586 59812	100nF 50V
2031	3198 016 36810	680pF 25V
2032	3198 016 31020	1nF 25V
2033	2222 867 15339	33pF 5% 50V
2034	2238 586 59812	100nF 50V
2035	2222 867 15339	33pF 5% 50V
2036	2222 867 15339	33pF 5% 50V
2037	4822 126 14238	2,2nF 50V
2038	4822 126 14238	2,2nF 50V
2039	3198 017 34730	47nF 16V
2040	4822 126 14238	2,2nF 50V
2041	4822 126 14238	2,2nF 50V
2042	2020 552 94427	100pF 5% 50V
2043	3198 016 31020	1nF 25V
2044	2238 586 59812	100nF 50V
2046	4822 126 14508	180pF 5% 50V
2047	3198 016 31020	1nF 25V
2048	4822 126 13193	4,7nF 10% 63V
2049	3198 016 31020	1nF 25V
2050	2238 586 59812	100nF 50V
2051	2238 586 59812	100nF 50V
2052	2222 867 15339	33pF 5% 50V
2053	2238 586 59812	100nF 50V
2054	2238 586 59812	100nF 50V
2055	2238 586 59812	100nF 50V
2056	2238 586 59812	100nF 50V
2057	3198 017 44740	470nF 10V
2058	4822 126 11785	47pF 5% 50V
2059	4822 126 11785	47pF 5% 50V
2060	2238 586 59812	100nF 50V
2062	4822 122 33741	10pF 10% 50V
2063	4822 122 33741	10pF 10% 50V
2064	4822 122 33741	10pF 10% 50V
2065	4822 122 33741	10pF 10% 50V
2066	4822 122 33741	10pF 10% 50V
2067	4822 122 33741	10pF 10% 50V
2068	2238 586 59812	100nF 50V
2069	2020 552 94427	100pF 5% 50V
2070	2020 552 94427	100pF 5% 50V
2071	4822 126 13193	4,7nF 10% 63V
2072	2238 586 59812	100nF 50V
2073	3198 017 41050	1uF 10V
2074	4822 126 13881	470pF 5% 50V
2075	2238 586 59812	100nF 50V
2076	2238 586 59812	100nF 50V
2077	2238 586 59812	100nF 50V
2078	3198 017 41050	1uF 10V
2079	3198 017 41050	1uF 10V
2080	2238 586 59812	100nF 50V
2201	2022 020 00625	220uF 20% 16V
2202	4822 124 80231	47uF 20% 16V
2203	4822 124 23052	100uF 20% 16V
2204	4822 124 23052	100uF 20% 16V
2205	4822 124 23052	100uF 20% 16V
2206	4822 124 80231	47uF 20% 16V
2207	4822 124 80231	47uF 20% 16V
2208	4822 124 22651	1uF 20% 50V
2209	4822 124 22651	1uF 20% 50V
2210	2022 020 00625	220uF 20% 16V
2211	4822 124 21732	10uF 20% 25V
2212	4822 124 80231	47uF 20% 16V
2213	4822 124 23052	100uF 20% 16V
2214	2022 020 00625	220uF 20% 16V
2215	4822 124 21732	10uF 20% 25V
2216	4822 124 23052	100uF 20% 16V
2217	2022 020 00625	220uF 20% 16V
2218	2022 020 00625	220uF 20% 16V
2301	2238 586 59812	100nF 50V
2302	2238 586 59812	100nF 50V
2303	2238 586 59812	100nF 50V
2304	2238 586 59812	100nF 50V
2305	2238 586 59812	100nF 50V
2306	2238 586 59812	100nF 50V

ELECTRICAL PARTS LIST - MONO-FE BOARD

2307	2238 586 59812	100nF 50V
2308	2238 586 59812	100nF 50V
2309	2238 586 59812	100nF 50V
2310	2238 586 59812	100nF 50V
2312	2238 586 59812	100nF 50V
2313	2238 586 59812	100nF 50V
2314	2238 586 59812	100nF 50V
2315	2238 586 59812	100nF 50V
2316	2238 586 59812	100nF 50V
2317	2238 586 59812	100nF 50V
2318	2238 586 59812	100nF 50V
2319	2238 586 59812	100nF 50V
2320	2238 586 59812	100nF 50V

RESISTORS

3001	4822 117 11817	1k2 1% 1/16W
3002	4822 117 13632	100k 1% 0,062W
3003	4822 051 30563	56k 5% 0,062W
3004	4822 051 30103	10k 5% 0,062W
3005	2322 704 65102	5k1 1% 0,062W
3007	4822 051 30472	4k7 5% 0,062W
3009	2322 704 62003	20k 1% 0,062W
3010	2322 704 65103	51k 1% 0,062W
3012	4822 051 30332	3k3 5% 0,062W
3013	4822 051 30332	3k3 5% 0,062W
3014	4822 051 30332	3k3 5% 0,062W
3015	4822 051 30102	1k 5% 0,062W
3017	4822 117 12925	47k 1% 0.063W
3018	4822 051 30339	33R 5% 0,062W
3020	4822 051 30332	3k3 5% 0,062W
3022	4822 051 30472	4k7 5% 0,062W
3025	2322 704 65102	5k1 1% 0,062W
3026	4822 051 30103	10k 5% 0,062W
3027	4822 117 13632	100k 1% 0,062W
3028	4822 051 30109	10R 5% 0,062W
3029	4822 051 30109	10R 5% 0,062W
3031	5322 117 13056	8k2 1% 0,063W
3032	2322 704 65102	5k1 1% 0,062W
3033	4822 051 30339	33R 5% 0,062W
3034	4822 051 30339	33R 5% 0,062W
3035	4822 051 30339	33R 5% 0,062W
3037	2322 702 60688	6R8 5% 0.062W
3038	4822 051 30222	2k2 5% 0,062W
3039	4822 051 30222	2k2 5% 0,062W
3040	4822 051 30103	10k 5% 0,062W
3042	4822 051 30103	10k 5% 0,062W
3049	4822 051 30152	1k5 5% 0,062W
3050	4822 051 30563	56k 5% 0,062W
3051	4822 051 30103	10k 5% 0,062W
3053	5322 117 13056	8k2 1% 0,063W
3054	4822 051 30474	470k 5% 0,062W
3059	4822 051 30339	33R 5% 0,062W
3060	4822 051 30339	33R 5% 0,062W
3065	4822 051 30391	390R 5% 0,062W
3066	4822 117 13632	100k 1% 0,062W
3067	4822 051 30472	4k7 5% 0,062W
3068	4822 051 30103	10k 5% 0,062W
3069	4822 051 30102	1k 5% 0,062W
3070	4822 051 30223	22k 5% 0,062W
3071	4822 051 30103	10k 5% 0,062W
3072	4822 051 30223	22k 5% 0,062W
3073	4822 051 30103	10k 5% 0,062W
3074	4822 051 30103	10k 5% 0,062W
3075	4822 117 13632	100k 1% 0,062W
3076	4822 117 13632	100k 1% 0,062W
3077	4822 051 30339	33R 5% 0,062W
3087	4822 051 30332	3k3 5% 0,062W
3088	4822 051 30103	10k 5% 0,062W
3089	4822 051 30103	10k 5% 0,062W
3090	4822 051 30333	33k 5% 0,062W
3091	4822 051 30333	33k 5% 0,062W
3092	4822 051 30223	22k 5% 0,062W
3093	4822 117 12925	47k 1% 0.063W
3094	4822 051 30333	33k 5% 0,062W
3095	4822 051 30339	33R 5% 0,062W
3096	4822 051 30123	12k 5% 0,062W
3097	4822 117 12925	47k 1% 0.063W
3098	4822 051 30332	3k3 5% 0,062W
3099	4822 051 30103	10k 5% 0,062W
3101	4822 051 20108	1R 5% 0,1W
3102	4822 051 20108	1R 5% 0,1W
3103	4822 051 20108	1R 5% 0,1W
3104	4822 051 20108	1R 5% 0,1W
3105	4822 051 30103	10k 5% 0,062W
3106	4822 051 30105	1M 5% 0,062W
3107	4822 051 30152	1k5 5% 0,062W
3108	4822 051 30472	4k7 5% 0,062W
3109	4822 051 30223	22k 5% 0,062W
3110	4822 051 30103	10k 5% 0,062W
3111	4822 051 30105	1M 5% 0,062W
3114	4822 051 30152	1k5 5% 0,062W
3115	4822 051 30472	4k7 5% 0,062W
3116	4822 051 30223	22k 5% 0,062W
3117	4822 051 20338	3R30 5% 0,1W
3301	4822 117 13576	RES NETWORK 4 X 33R 5% 1206
3302	4822 117 13576	RES NETWORK 4 X 33R 5% 1206
3303	4822 117 13576	RES NETWORK 4 X 33R 5% 1206
3304	4822 117 13578	RES NETWORK 4 X 10k 5% 1206
3305	4822 117 13578	RES NETWORK 4 X 10k 5% 1206
3306	4822 117 13576	RES NETWORK 4 X 33R 5% 1206
3307	4822 117 13576	RES NETWORK 4 X 33R 5% 1206
3308	4822 117 13573	RES NETWORK 4 X 47R 5% 1206
3309	4822 117 13578	RES NETWORK 4 X 10k 5% 1206
3310	4822 117 13578	RES NETWORK 4 X 10k 5% 1206

12-2

BOTTOM VIEW - COMPONENT LAYOUT

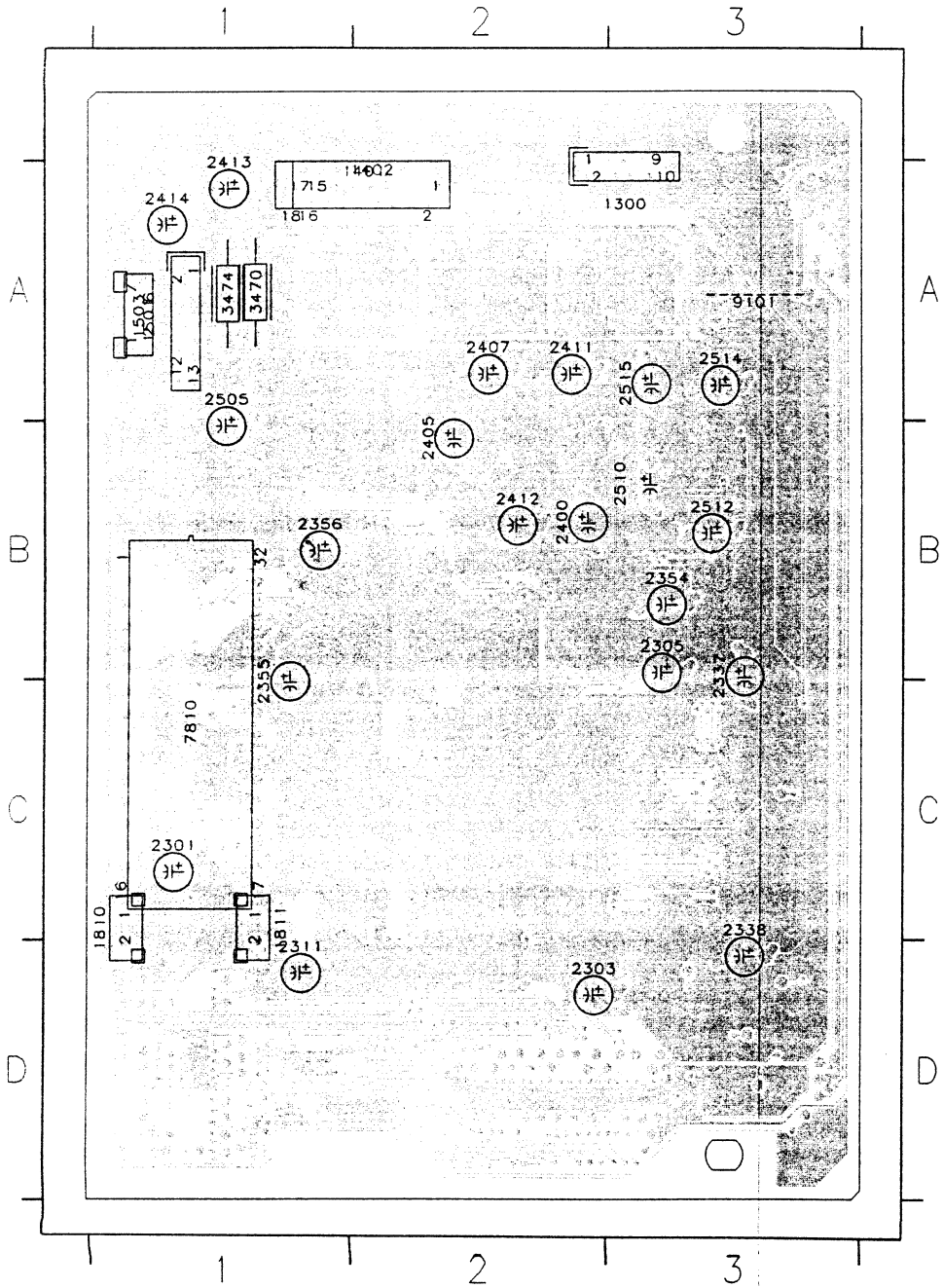

1300	A3
1401	A2
1402	A2
1501	A1
1503	A1
1810	C1
1811	C1
2301	C1
2303	D2
2305	B3
2311	D1
2337	B3
2338	C3
2354	B3
2355	C1
2356	D1
2400	B2
2405	B2
2407	A2
2411	A2
2412	B2
2413	A1
2414	A1
2505	A1
2510	B3
2512	B3
2514	A3
2515	A3
3470	A1
3474	A1
7810	C1
9101	A3

MONO-BE BOARD

TABLE OF CONTENTS

CS8415A & M29F800DT Internal Block Diagram 12-1
Bottom View - Component Layout 12-2
Top View - SMDs & Component Layout 12-3
Top View - SMDs & Component Layout Part A 12-4
Top View - SMDs & Component Layout Part B 12-5
Circuit Diagram 1 12-6
Circuit Diagram 2 12-7
Circuit Diagram 3 12-8
Electrical parts list 12-9

CS8415A

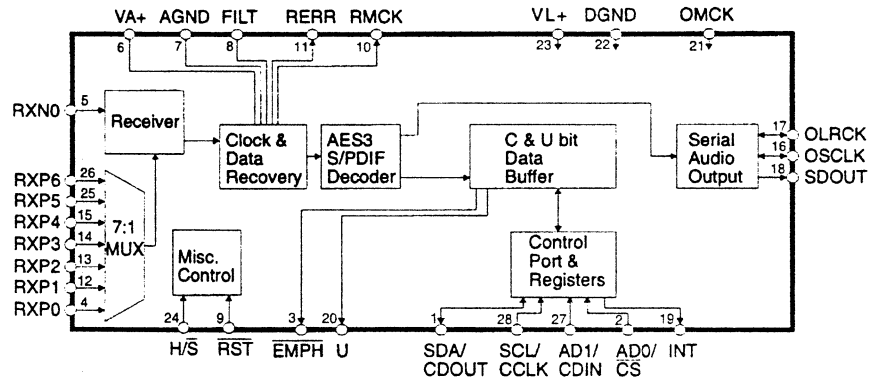

M29F800DT

Logic Diagram

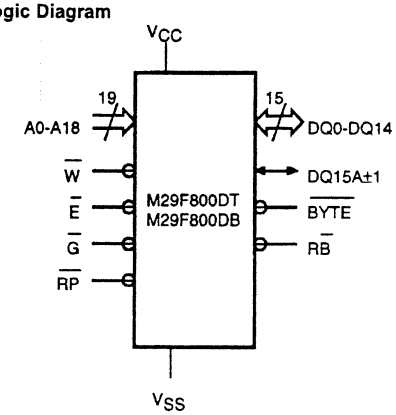

Pins connection

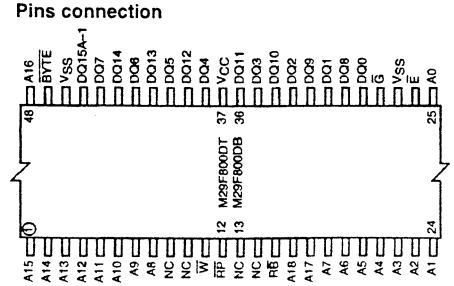

Table 1. Signal Names

A0-A18	Address Inputs
DQ0-DQ7	Data Inputs/Outputs
DQ8-DQ14	Data Inputs/Outputs
DQ15A±1	Data Input/Output or Address Input
$\overline{E}$	Chip Enable
$\overline{G}$	Output Enable
$\overline{W}$	Write Enable
$\overline{RP}$	Reset/Block Temporary Unprotect
$\overline{RB}$	Ready/Busy Output (not available on SO44 package)
$\overline{BYTE}$	Byte/Word Organization Select
V_{CC}	Supply Voltage
V_{SS}	Ground
NC	Not Connected Internally

12-3

TOP VIEW - SMD & COMPONENT LAYOUT

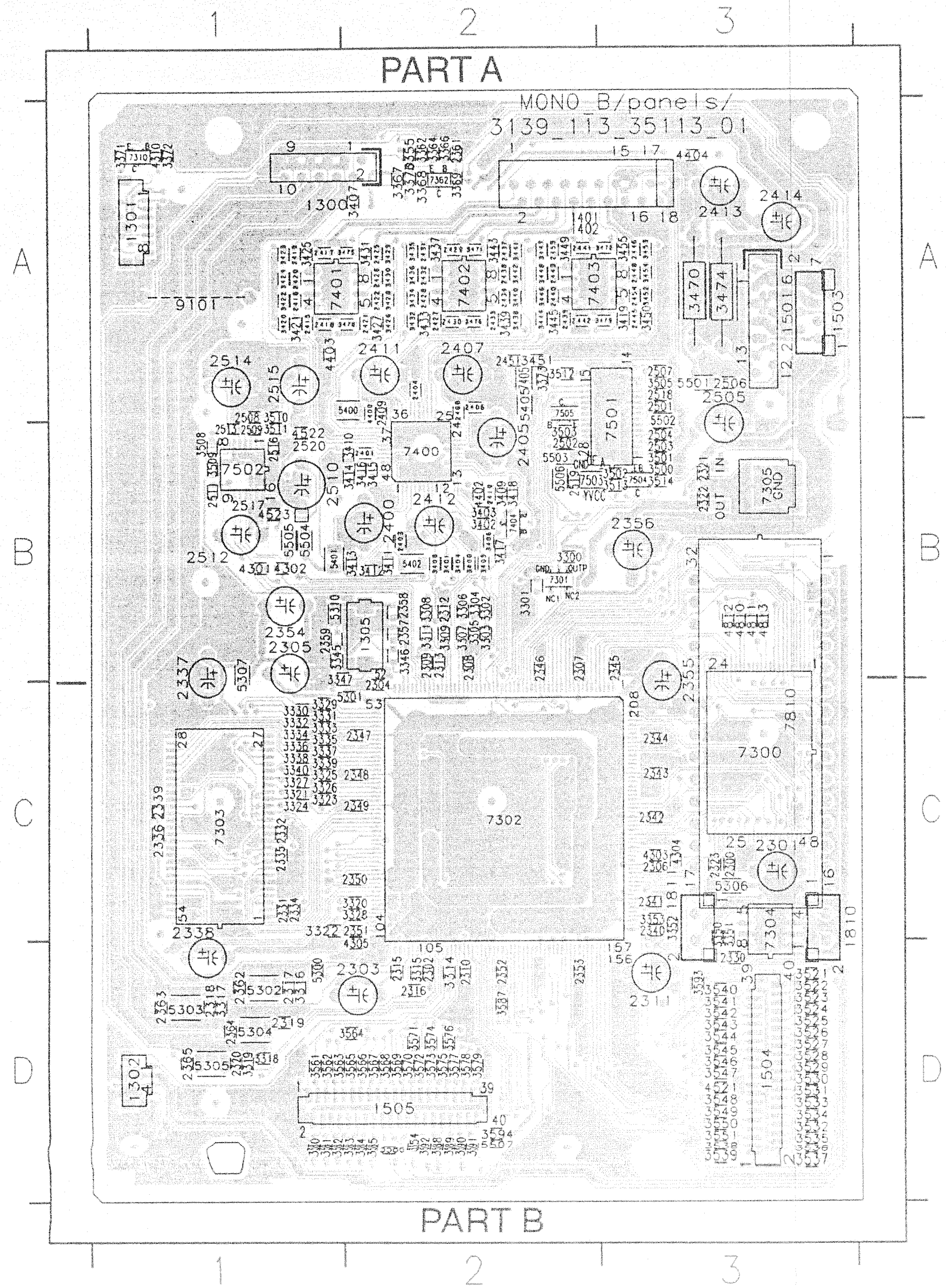

1300	A1	2411	A2	3327	C1	3446	A2	3579	D2
1301	A1	2412	B2	3328	C2	3447	A2	3580	D1
1302	D1	2413	A3	3329	C1	3448	A2	3581	D1
1305	B2	2414	A3	3330	C1	3449	A2	3582	D1
1401	A2	2415	A1	3331	C1	3450	A3	3583	D2
1402	A2	2416	A1	3332	C1	3451	A2	3584	D2
1501	A3	2417	A1	3333	C1	3452	A3	3585	D2
1503	A3	2418	A1	3334	C1	3453	A3	3586	D2
1504	D3	2419	A1	3335	C1	3454	A3	3587	D2
1505	D2	2420	A1	3336	C1	3455	A3	3588	D2
1810	C3	2421	A2	3337	C1	3470	A3	3589	D2
1811	C3	2422	A2	3338	C1	3471	A2	3590	D2
2300	C3	2425	A2	3339	C1	3472	A3	3591	D2
2301	C3	2426	A2	3340	C1	3474	A3	3592	D2
2302	D2	2427	A2	3345	B1	3475	A2	3593	D3
2303	D2	2428	A2	3346	B2	3476	A2	3594	D2
2304	C2	2429	A2	3347	B1	3478	A2	4301	B1
2305	B1	2430	A2	3350	C3	3479	A3	4302	B1
2306	C3	2431	A2	3351	C3	3500	B3	4303	C3
2307	B2	2432	A2	3352	C3	3501	B3	4304	C3
2308	B2	2433	A2	3353	C3	3502	B3	4305	D2
2309	B2	2434	A2	3354	D2	3503	B2	4310	A1
2310	D2	2437	A2	3355	A2	3505	A3	4400	A2
2311	D3	2438	A2	3362	A2	3508	B1	4402	B2
2312	B2	2439	A2	3364	A2	3509	B1	4403	A1
2313	B2	2440	A2	3366	A2	3510	A1	4404	A3
2315	D2	2441	A2	3367	A2	3511	B1	4521	D3
2316	D2	2442	A2	3368	A2	3512	A2	4522	B1
2317	D1	2443	A2	3369	A2	3513	B3	4523	B1
2318	D1	2445	A3	3370	A2	3514	B3	4810	B3
2319	D1	2446	A3	3371	A1	3521	D3	4811	B3
2320	D1	2448	A3	3372	A1	3522	D3	4812	B3
2321	B3	2451	A2	3373	A2	3523	D3	4813	B3
2322	B3	2454	A3	3400	B2	3524	D3	5300	D1
2323	C3	2455	A2	3401	B2	3525	D3	5301	C2
2330	D3	2501	A3	3402	B2	3526	D3	5302	D1
2331	C1	2502	B2	3403	B2	3527	D3	5303	D1
2332	C1	2503	B3	3404	B2	3528	D3	5304	D1
2334	C1	2504	B3	3405	B2	3529	D3	5305	D1
2335	C1	2505	A3	3406	B2	3530	D3	5306	C3
2336	C1	2506	A3	3407	A2	3531	D3	5307	B1
2337	B1	2507	A3	3408	B2	3532	D3	5310	B1
2338	C1	2508	A1	3409	B2	3533	D3	5400	A2
2339	C1	2509	B1	3410	B2	3534	D3	5401	B1
2340	C3	2510	B1	3411	B2	3535	D3	5402	B2
2341	C3	2511	B1	3412	B2	3536	D3	5405	A2
2342	C3	2512	B1	3413	B2	3537	D3	5501	A3
2343	C3	2513	B1	3414	B2	3538	D3	5502	B3
2344	C3	2514	A1	3415	B2	3539	D3	5503	B2
2345	B3	2515	A1	3416	B2	3540	D3	5504	B1
2346	B2	2516	B1	3417	B2	3541	D3	5505	B1
2347	C2	2517	B1	3418	B2	3542	D3	5506	B2
2348	C2	2518	A3	3419	A3	3543	D3	5507	D2
2349	C2	2519	B2	3420	A1	3544	D3	7300	C3
2350	C2	2520	B1	3421	A1	3545	D3	7301	B2
2351	C2	3300	B2	3422	A1	3546	D3	7302	C2
2352	D2	3301	B2	3423	A1	3547	D3	7303	C1
2353	D2	3302	B2	3424	A1	3548	D3	7304	C3
2354	B1	3303	B2	3425	A1	3549	D3	7305	B3
2355	C3	3304	B2	3426	A2	3550	D3	7310	A1
2356	B3	3305	B2	3427	A2	3551	D3	7362	A2
2357	B2	3306	B2	3428	A2	3561	D1	7400	B2
2358	B2	3307	B2	3429	A2	3562	D1	7401	A1
2359	B1	3308	B2	3430	A2	3563	D1	7402	A2
2361	A2	3309	B2	3431	A2	3564	D2	7403	A2
2362	D1	3311	B2	3432	A2	3565	D2	7404	B2
2363	D1	3314	D2	3433	A2	3566	D2	7405	A2
2364	D1	3315	D2	3434	A2	3567	D2	7501	B3
2365	D1	3316	D1	3435	A2	3568	D2	7502	B1
2400	B2	3317	D1	3436	A2	3569	D2	7503	B2
2401	B2	3318	D1	3437	A2	3570	D2	7504	B3
2403	B2	3319	D1	3438	A2	3571	D2	7505	A2
2404	A2	3320	C2	3439	A2	3572	D2	7810	C3
2405	B2	3321	C1	3440	A2	3573	D2	9101	A1
2406	A2	3322	C1	3441	A2	3574	D2		
2407	A2	3323	C1	3442	A2	3575	D2		
2408	A2	3324	C1	3443	A2	3576	D2		
2409	A2	3325	C1	3444	A2	3577	D2		
2410	B2	3326	C1	3445	A2	3578	D2		

TOP VIEW - SMD & COMPONENT LAYOUT PART A

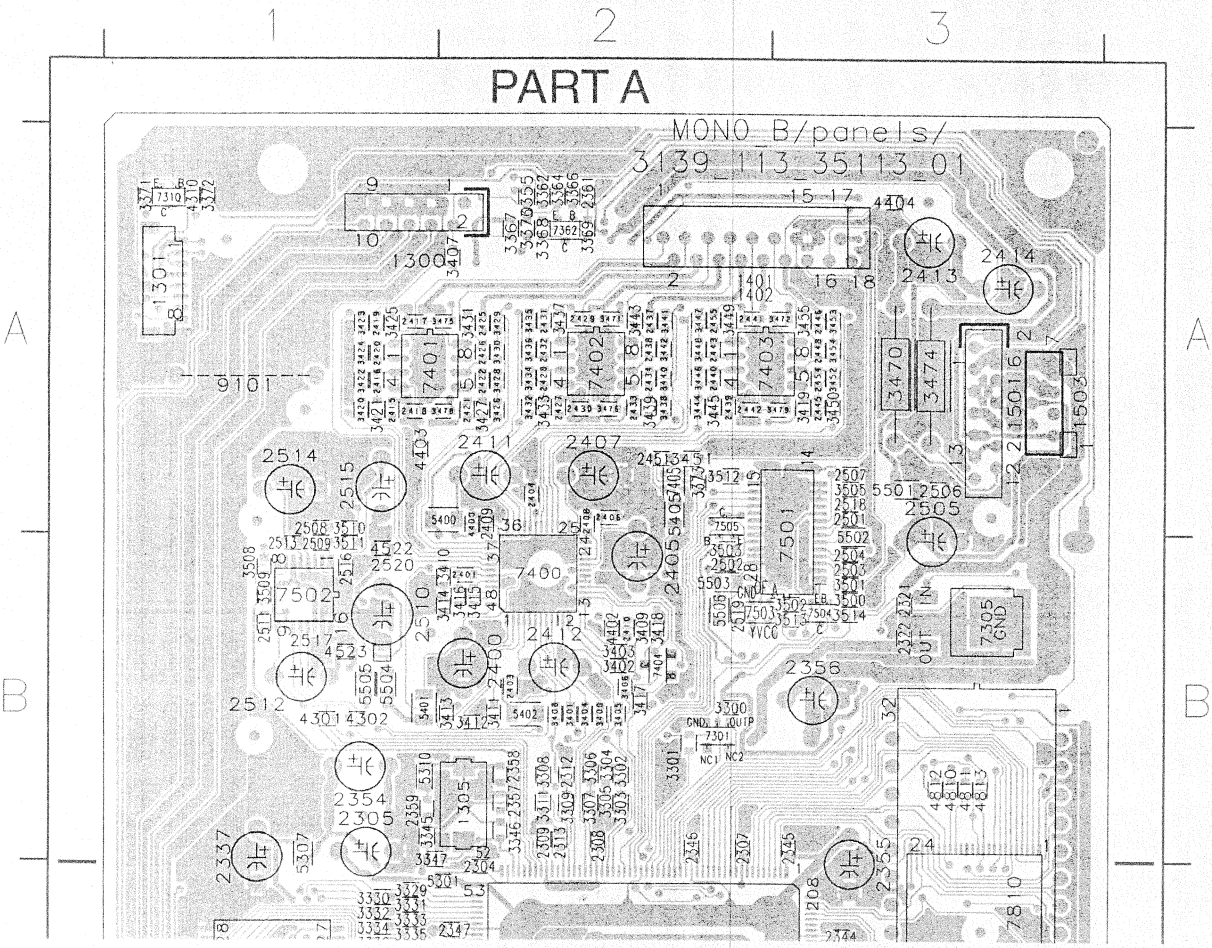

TOP VIEW - SMD & COMPONENT LAYOUT PART B

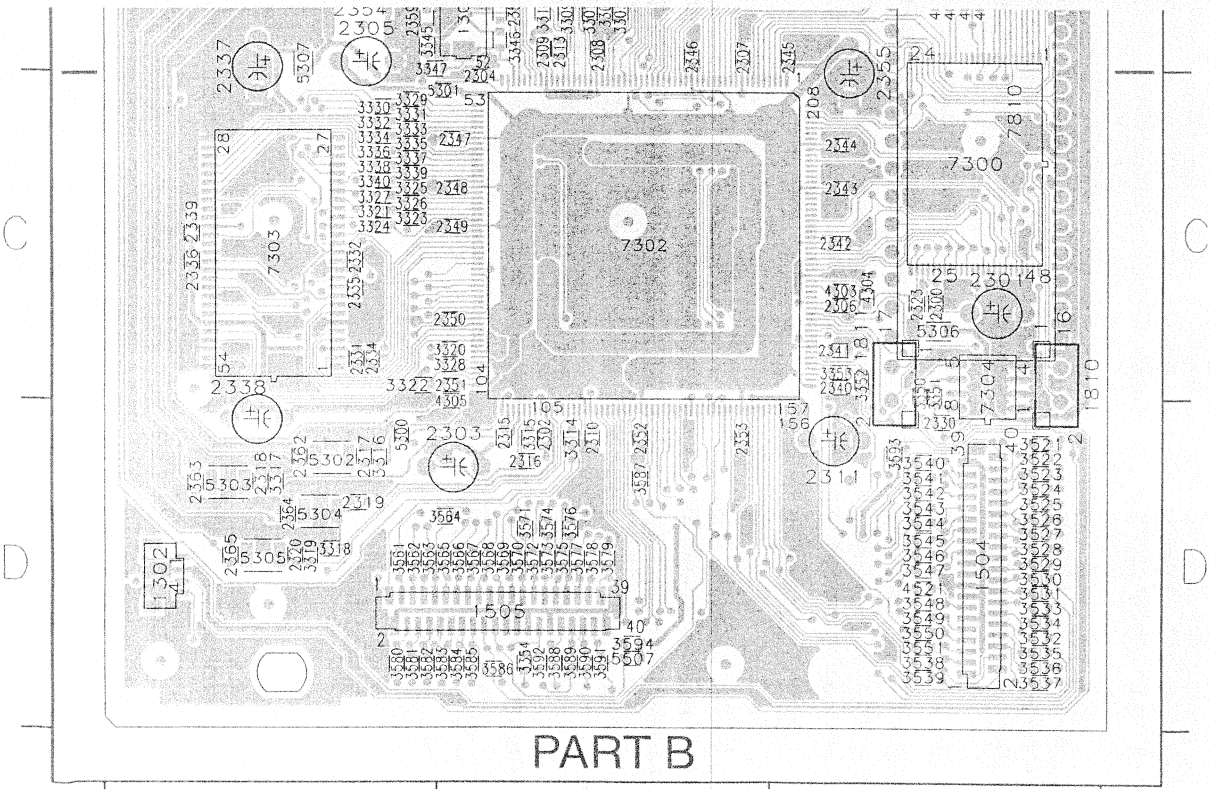

12-6

CIRCUIT DIAGRAM 1

1300 C14 1301 I10 1302 I14 1305 I8 1810 I1
1811 I1 2300 B1 2301 B1 2302 A4 2303 A4
2304 B4 2305 B4 2306 A8 2307 A8 2308 A8
2309 B8 2310 B8 2311 B8 2312 B8 2313 B9
2315 D9 2316 D9 2317 D9 2318 D10 2319 D10
2320 D11 2321 A9 2322 A10 2323 E3 2330 I12
2331 H10 2332 H10 2334 H10 2335 H11 2336 H11
2337 H11 2338 H11 2339 E13 2340 A4 2341 A4
2342 A4 2343 A5 2344 A5 2345 A5 2346 A5
2347 A6 2348 A6 2349 A6 2350 A7 2351 A7
2352 A7 2353 A7 2354 A8 2355 A8 2356 A8
2357 I8 2358 I8 2359 I9 2361 B14 2362 D12
2363 D12 2364 D12 2365 D12 3300 A3 3301 B5
3302 B9 3303 B9 3304 B9 3305 B10 3306 B10
3307 B10 3308 B10 3309 B8 3311 B10 3314 D8
3315 D9 3316 D9 3317 D10 3318 D10 3319 D11
3320 E8 3321 E9 3322 E8 3323 E8 3324 E9
3325 E8 3326 E9 3327 E8 3328 E9 3329 E8
3330 E9 3331 F8 3332 F9 3333 F8 3334 F9
3335 F8 3336 F9 3337 F8 3338 F9 3339 F8
3340 F9 3345 H9 3346 H8 3347 I8 3350 I10
3351 I11 3352 H8 3353 G9 3354 H8 3355 H8
3362 B12 3364 B12 3366 B13 3367 A14 3368 B13
3369 B14 3370 B13 3371 I4 3372 I5 3373 C11
4301 A11 4302 A11 4303 C4 4304 C4 4305 A11
4310 I9 4810 I1 4811 I1 4812 I1 4813 H2
5300 A5 5301 A5 5302 D11 5303 D11 5304 D11
5305 D11 5306 B1 5307 F10 5310 H9 7300 B2
7301 A3 7302 E6 7304 I11 7305 A9 7310 I5
7362 B13 7810 F1

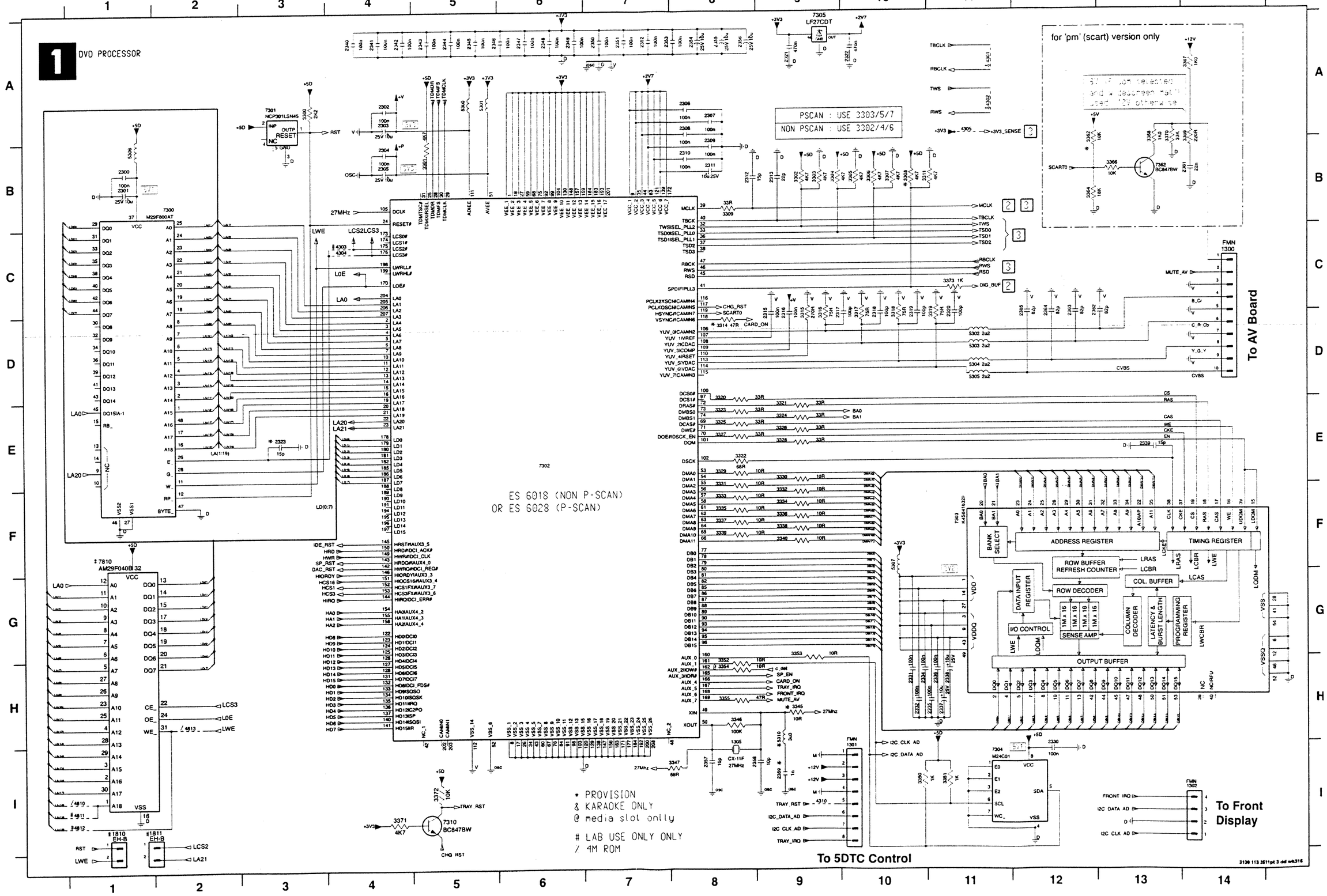

12-7

CIRCUIT DIAGRAM 2

1401 G13 1402 F14 2400 D2 2401 D3 2403 D4 2404 D5 2405 G7 2406 G7 2407 G7 2408 G7 2409 H5 2410 F3 2411 I2 2412 I2 2413 I4 2414 I6 2415 A9 2416 A10 2417 A11 2418 A11 2419 B9 2420 B11 2421 B9 2422 B10 2425 C9 2426 C11 2427 D9 2428 D10 2429 D11 2430 D11 2431 D9 2432 D11 2433 E9 2434 E10 2437 F9 2438 F11 2439 G9 2440 G10 2441 F11 2442 G11 2443 G11 2445 H9 2446 H9 2448 H11 2451 H13 2454 H10 2455 G9 3400 E2 3401 E2 3402 E2 3403 E2 3404 E2 3405 E2 3406 F2 3407 G7 3408 F2 3409 F2 3410 G2 3411 G2 3412 G2 3413 G2 3414 G2 3415 G2 3416 G2 3417 E2 3418 D3 3419 H9 3420 A9 3421 A9 3422 A10 3423 B9 3424 B10 3425 B10 3426 B9 3427 B9 3428 B10 3429 C9 3430 C10 3431 C10 3432 D9 3433 D9 3434 D10 3435 E9 3436 D10 3437 E10 3438 E9 3439 E9 3440 E10 3441 F9 3442 F10 3443 F10 3444 F9 3445 G9 3446 F10 3447 G9 3448 G10 3449 G10 3450 H9 3451 I13 3452 H10 3453 I9 3454 H10 3455 I10 3470 I4 3471 I4 3472 I4 3474 I6 3475 I4 3476 I7 3478 H7 3479 I7 4400 H5 4402 F2 4403 H2 4404 H2 5400 I2 5401 D2 5402 I2 5405 H13 7401-A A11 7401-B B11 7402-A D11 7402-B E11 7403-A G11 7403-B H11 7404 D2 7405 I13

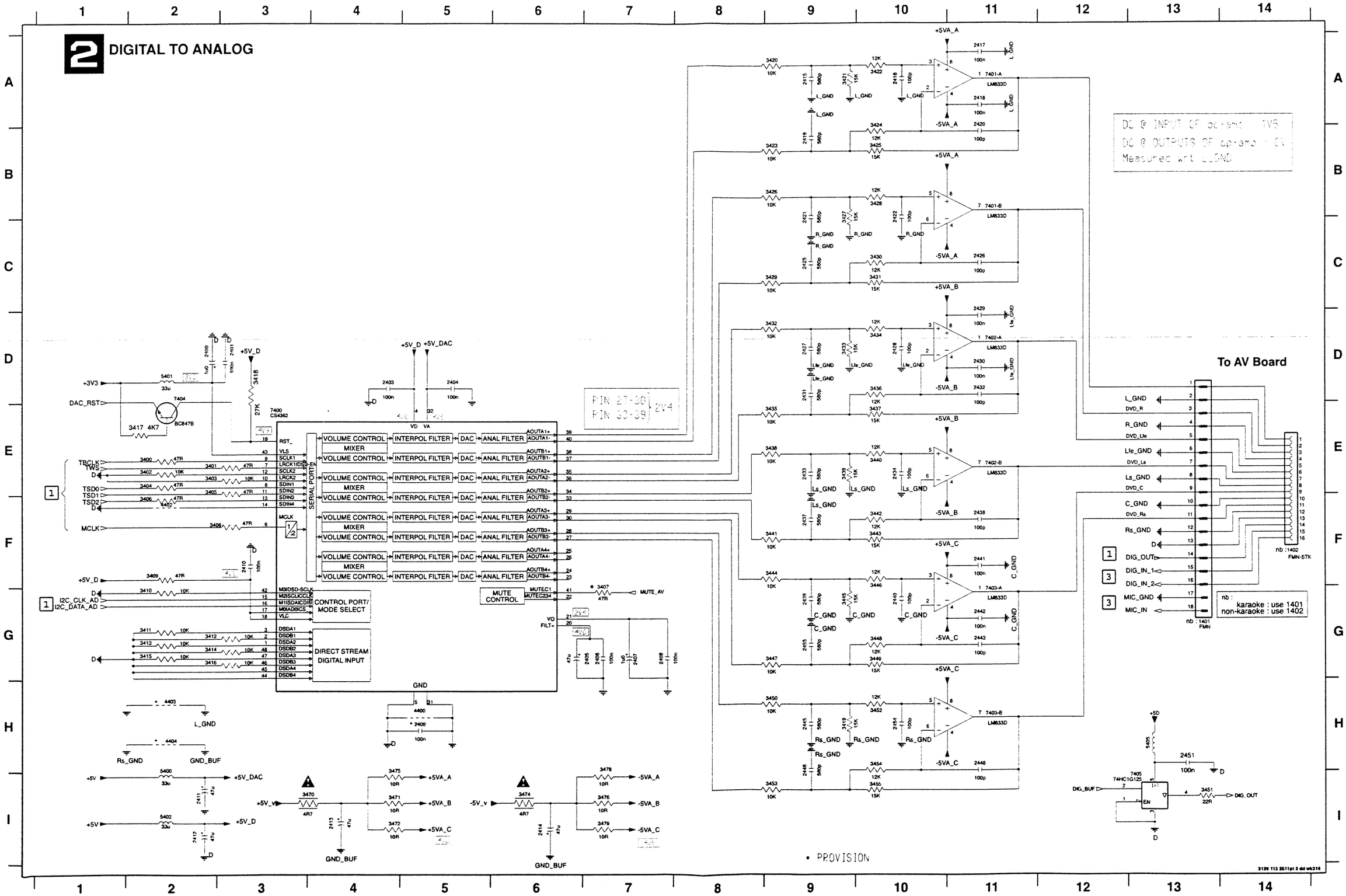

12-8

CIRCUIT DIAGRAM 3

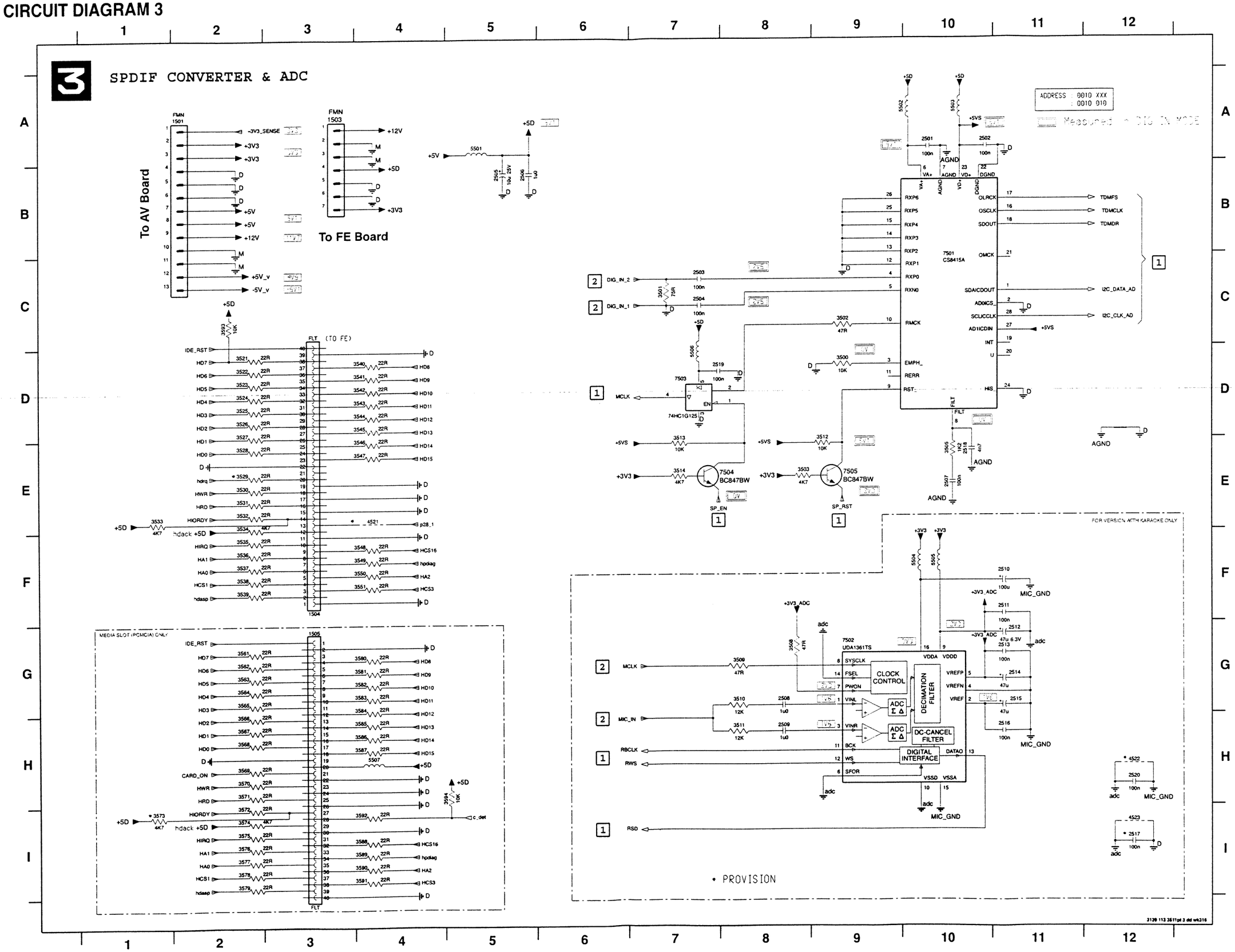

1501 A2
1503 A3
1504 F3
1505 G3
2501 A10
2502 A10
2503 C7
2504 C7
2505 B5
2506 B5
2507 E10
2508 G8
2509 H8
2510 F11
2511 F11
2512 G11
2513 G11
2514 G11
2515 G11
2516 H11
2517 I12
2518 E10
2519 D7
2520 H12
3500 D9
3501 C7
3502 C9
3503 E8
3505 E10
3508 G8
3509 G8
3510 G8
3511 H8
3512 E9
3513 E7
3514 E7
3521 D2
3522 D2
3523 D2
3524 D2
3525 D2
3526 D2
3527 D2
3528 E2
3529 E2
3530 E2
3531 E2
3532 E2
3533 E1
3534 E2
3535 F2
3536 F2
3537 F2
3538 F2
3539 F2
3540 D4
3541 D4
3542 D4
3543 D4
3544 D4
3545 D4
3546 E4
3547 E4
3548 F4
3549 F4
3550 F4
3551 F4
3561 G2
3562 G2
3563 G2
3564 G2
3565 G2
3566 H2
3567 H2
3568 H2
3569 H2
3570 H2
3571 H2
3572 I2
3573 I1
3574 I2
3575 I2
3576 I2
3577 I2
3578 I2
3579 I2
3580 G4
3581 G4
3582 G4
3583 G4
3584 G4
3585 H4
3586 H4
3587 H4
3588 I4
3589 I4
3590 I4
3591 I4
3592 I4
3593 C2
3594 H5
4521 E4
4522 H12
4523 I12
5501 A5
5502 A9
5503 A10
5504 F10
5505 F10
5506 D7
5507 H4
7501 C10
7502 G9
7503 D7
7504 E7
7505 E9

ELECTRICAL PARTS LIST - MONO-BE BOARD

MISCELLANEOUS

	3139 118 56481	Mono BE Board Assy CD222 P
	3139 118 56471	Mono BE Board Assy CD222 PM
	3139 118 56461	Mono BE Board Assy CD222 PMK
1300	2422 025 16587	Flex Socket 10P
1301	2422 025 16988	Flex Socket 8P
1302	2422 025 16792	Flex Socket 4P
1305	2422 543 01137	X'tal Resonator 27MHz
1401	2422 025 17196	Flex Socket 18P
1402	4822 267 11028	Flex Socket 16P
1501	2422 025 16591	Flex Socket 13P
1503	2422 025 17367	Flex Socket 7P
1504	2422 025 17763	Flex Socket 40P
1505	2422 025 17763	Flex Socket 40P

CAPACITORS

2300	2238 586 59812	100nF +80/-20% 50V
2301	4822 124 21732	10uF 20% 25V
2302	2238 586 59812	100nF +80/-20% 50V
2303	4822 124 21732	10uF 20% 25V
2304	2238 586 59812	100nF +80/-20% 50V
2305	4822 124 21732	10uF 20% 25V
2306	2238 586 59812	100nF +80/-20% 50V
2307	2238 586 59812	100nF +80/-20% 50V
2308	2238 586 59812	100nF +80/-20% 50V
2309	2238 586 59812	100nF +80/-20% 50V
2310	2238 586 59812	100nF +80/-20% 50V
2311	4822 124 21732	10uF 20% 25V
2312	4822 122 33752	15pF 5% 50V
2313	4822 122 33761	22pF 5% 50V
2315	2238 586 59812	100nF +80/-20% 50V
2316	2238 586 59812	100nF +80/-20% 50V
2317	2020 552 94427	100pF 5% 50V
2318	2020 552 94427	100pF 5% 50V
2319	2020 552 94427	100pF 5% 50V
2320	2020 552 94427	100pF 5% 50V
2321	3198 017 44740	470nF 10V
2322	3198 017 44740	470nF 10V
2330	2238 586 59812	100nF +80/-20% 50V
2331	2238 586 59812	100nF +80/-20% 50V
2332	2238 586 59812	100nF +80/-20% 50V
2334	2238 586 59812	100nF +80/-20% 50V
2335	2238 586 59812	100nF +80/-20% 50V
2336	2238 586 59812	100nF +80/-20% 50V
2337	4822 124 21732	10uF 20% 25V
2338	4822 124 21732	10uF 20% 25V
2339	4822 122 33752	15pF 5% 50V
2340	2238 586 59812	100nF +80/-20% 50V
2341	2238 586 59812	100nF +80/-20% 50V
2342	2238 586 59812	100nF +80/-20% 50V
2343	2238 586 59812	100nF +80/-20% 50V
2344	2238 586 59812	100nF +80/-20% 50V
2345	2238 586 59812	100nF +80/-20% 50V
2346	2238 586 59812	100nF +80/-20% 50V
2347	2238 586 59812	100nF +80/-20% 50V
2348	2238 586 59812	100nF +80/-20% 50V
2349	2238 586 59812	100nF +80/-20% 50V
2350	2238 586 59812	100nF +80/-20% 50V
2351	2238 586 59812	100nF +80/-20% 50V
2352	2238 586 59812	100nF +80/-20% 50V
2353	2238 586 59812	100nF +80/-20% 50V
2354	4822 124 21732	10uF 20% 25V
2355	4822 124 21732	10uF 20% 25V
2356	4822 124 21732	10uF 20% 25V
2357	4822 122 33741	10pF 10% 50V
2358	4822 122 33741	10pF 10% 50V
2361	3198 017 42230	22nF 50V
2362	4822 126 14226	82pF 5% 50V
2363	4822 126 14226	82pF 5% 50V
2364	4822 126 14226	82pF 5% 50V
2365	4822 126 14226	82pF 5% 50V
2400	4822 124 22651	1uF 20% 50V
2401	2238 586 59812	100nF +80/-20% 50V
2403	2238 586 59812	100nF +80/-20% 50V
2404	2238 586 59812	100nF +80/-20% 50V
2405	4822 124 80483	47uF 20% 6,3V
2406	2238 586 59812	100nF +80/-20% 50V
2407	4822 124 22651	1uF 20% 50V
2408	2238 586 59812	100nF +80/-20% 50V
2410	2238 586 59812	100nF +80/-20% 50V
2411	4822 124 80483	47uF 20% 6,3V
2412	4822 124 80483	47uF 20% 6,3V
2413	4822 124 80483	47uF 20% 6,3V
2414	4822 124 80483	47uF 20% 6,3V
2415	4822 126 14249	560pF 10% 50V
2416	2020 552 94427	100pF 5% 50V
2417	2238 586 59812	100nF +80/-20% 50V
2418	2238 586 59812	100nF +80/-20% 50V
2419	4822 126 14249	560pF 10% 50V
2420	2020 552 94427	100pF 5% 50V
2421	4822 126 14249	560pF 10% 50V
2422	2020 552 94427	100pF 5% 50V
2425	4822 126 14249	560pF 10% 50V
2426	2020 552 94427	100pF 5% 50V
2427	4822 126 14249	560pF 10% 50V
2428	2020 552 94427	100pF 5% 50V
2429	2238 586 59812	100nF +80/-20% 50V
2430	2238 586 59812	100nF +80/-20% 50V
2431	4822 126 14249	560pF 10% 50V
2432	2020 552 94427	100pF 5% 50V
2433	4822 126 14249	560pF 10% 50V
2434	2020 552 94427	100pF 5% 50V
2437	4822 126 14249	560pF 10% 50V
2438	2020 552 94427	100pF 5% 50V
2439	4822 126 14249	560pF 10% 50V

ELECTRICAL PARTS LIST - MONO-BE BOARD

2440	2020 552 94427	100pF 5% 50V
2441	2238 586 59812	100nF +80/-20% 50V
2442	2238 586 59812	100nF +80/-20% 50V
2443	2020 552 94427	100pF 5% 50V
2445	4822 126 14249	560pF 10% 50V
2446	4822 126 14249	560pF 10% 50V
2448	2020 552 94427	100pF 5% 50V
2451	2238 586 59812	100nF +80/-20% 50V
2454	2020 552 94427	100pF 5% 50V
2455	4822 126 14249	560pF 10% 50V
2501	2238 586 59812	100nF +80/-20% 50V
2502	2238 586 59812	100nF +80/-20% 50V
2503	2238 586 59812	100nF +80/-20% 50V
2504	2238 586 59812	100nF +80/-20% 50V
2505	4822 124 21732	10uF 20% 25V
2506	3198 017 41050	1uF 10V
2507	2238 586 59812	100nF +80/-20% 50V
2508	3198 017 41050	1uF 10V
2509	3198 017 41050	1uF 10V
2510	4822 124 42234	100uF 20% 6,3V
2511	2238 586 59812	100nF +80/-20% 50V
2512	4822 124 80483	47uF 20% 6,3V
2513	2238 586 59812	100nF +80/-20% 50V
2514	4822 124 80483	47uF 20% 6,3V
2515	4822 124 80483	47uF 20% 6,3V
2516	2238 586 59812	100nF +80/-20% 50V
2518	4822 126 13193	4,7nF 10% 63V
2519	2238 586 59812	100nF +80/-20% 50V
2520	2238 586 59812	100nF +80/-20% 50V

RESISTORS

3300	4822 051 30222	2k2 5% 0,062W
3301	4822 051 30472	4k7 5% 0,062W
3303	4822 051 30472	4k7 5% 0,062W
3305	4822 051 30472	4k7 5% 0,062W
3307	4822 051 30472	4k7 5% 0,062W
3309	4822 051 30339	33R 5% 0,062W
3311	4822 051 30472	4k7 5% 0,062W
3315	4822 051 30271	270R 5% 0,062W
3316	4822 051 30759	75R 5% 0,062W
3317	4822 051 30759	75R 5% 0,062W
3318	4822 051 30759	75R 5% 0,062W
3319	4822 051 30759	75R 5% 0,062W
3320	4822 051 30339	33R 5% 0,062W
3321	4822 051 30339	33R 5% 0,062W
3322	4822 051 30689	68R 5% 0,063W
3323	4822 051 30339	33R 5% 0,062W
3324	4822 051 30339	33R 5% 0,062W
3325	4822 051 30339	33R 5% 0,062W
3326	4822 051 30339	33R 5% 0,062W
3327	4822 051 30339	33R 5% 0,062W
3328	4822 051 30339	33R 5% 0,062W
3329	4822 051 30109	10R 5% 0,062W
3330	4822 051 30109	10R 5% 0,062W
3331	4822 051 30109	10R 5% 0,062W
3332	4822 051 30109	10R 5% 0,062W
3333	4822 051 30109	10R 5% 0,062W
3334	4822 051 30109	10R 5% 0,062W
3335	4822 051 30109	10R 5% 0,062W
3336	4822 051 30109	10R 5% 0,062W
3337	4822 051 30109	10R 5% 0,062W
3338	4822 051 30109	10R 5% 0,062W
3339	4822 051 30109	10R 5% 0,062W
3340	4822 051 30109	10R 5% 0,062W
3346	4822 117 13632	100k 1% 0,62W
3347	4822 051 30689	68R 5% 0,063W
3350	4822 051 30102	1k 5% 0,062W
3351	4822 051 30102	1k 5% 0,062W
3352	4822 051 30109	10R 5% 0,062W
3353	4822 051 30109	10R 5% 0,062W
3354	4822 051 30109	10R 5% 0,062W
3355	4822 051 30479	47R 5% 0,062W
3364	4822 051 30183	18k 5% 0,062W
3366	4822 051 30103	10k 5% 0,062W
3367	4822 051 30102	1k 5% 0,062W
3368	4822 051 30102	1k 5% 0,062W
3369	4822 051 30221	220R 5% 0,062W
3370	4822 051 30333	33k 5% 0,062W
3371	4822 051 30472	4k7 5% 0,062W
3372	4822 051 30103	10k 5% 0,062W
3373	4822 051 30102	1k 5% 0,062W
3400	4822 051 30479	47R 5% 0,062W
3401	4822 051 30479	47R 5% 0,062W
3402	4822 051 30103	10k 5% 0,062W
3403	4822 051 30103	10k 5% 0,062W
3404	4822 051 30479	47R 5% 0,062W
3405	4822 051 30479	47R 5% 0,062W
3406	4822 051 30479	47R 5% 0,062W
3408	4822 051 30479	47R 5% 0,062W
3409	4822 051 30479	47R 5% 0,062W
3410	4822 051 30103	10k 5% 0,062W
3411	4822 051 30103	10k 5% 0,062W
3412	4822 051 30103	10k 5% 0,062W
3413	4822 051 30103	10k 5% 0,062W
3414	4822 051 30103	10k 5% 0,062W
3415	4822 051 30103	10k 5% 0,062W
3416	4822 051 30103	10k 5% 0,062W
3417	4822 051 30472	4k7 5% 0,062W
3418	4822 051 30273	27k 5% 0,062W
3419	4822 051 30153	15k 5% 0,062W
3420	4822 051 30103	10k 5% 0,062W
3421	4822 051 30153	15k 5% 0,062W
3422	4822 051 30123	12k 5% 0,062W
3423	4822 051 30103	10k 5% 0,062W

ELECTRICAL PARTS LIST - MONO-BE BOARD

RESISTORS

3424	4822 051 30123	12k 5% 0,062W
3425	4822 051 30153	15k 5% 0,062W
3426	4822 051 30103	10k 5% 0,062W
3427	4822 051 30153	15k 5% 0,062W
3428	4822 051 30123	12k 5% 0,062W
3429	4822 051 30103	10k 5% 0,062W
3430	4822 051 30123	12k 5% 0,062W
3431	4822 051 30153	15k 5% 0,062W
3432	4822 051 30103	10k 5% 0,062W
3433	4822 051 30153	15k 5% 0,062W
3434	4822 051 30123	12k 5% 0,062W
3435	4822 051 30103	10k 5% 0,062W
3436	4822 051 30123	12k 5% 0,062W
3437	4822 051 30153	15k 5% 0,062W
3438	4822 051 30103	10k 5% 0,062W
3439	4822 051 30153	15k 5% 0,062W
3440	4822 051 30123	12k 5% 0,062W
3441	4822 051 30103	10k 5% 0,062W
3442	4822 051 30123	12k 5% 0,062W
3443	4822 051 30153	15k 5% 0,062W
3444	4822 051 30103	10k 5% 0,062W
3445	4822 051 30153	15k 5% 0,062W
3446	4822 051 30123	12k 5% 0,062W
3447	4822 051 30103	10k 5% 0,062W
3448	4822 051 30123	12k 5% 0,062W
3449	4822 051 30153	15k 5% 0,062W
3450	4822 051 30103	10k 5% 0,062W
3451	4822 117 12139	22R 5% 0,062W
3452	4822 051 30123	12k 5% 0,062W
3453	4822 051 30103	10k 5% 0,062W
3454	4822 051 30123	12k 5% 0,062W
3455	4822 051 30153	15k 5% 0,062W
3470	4822 052 10478	4R7 5% 0,33W
3471	4822 051 30109	10R 5% 0,062W
3472	4822 051 30109	10R 5% 0,062W
3474	4822 052 10478	4R7 5% 0,33W
3475	4822 051 30109	10R 5% 0,062W
3476	4822 051 30109	10R 5% 0,062W
3478	4822 051 30109	10R 5% 0,062W
3479	4822 051 30109	10R 5% 0,062W
3500	4822 051 30103	10k 5% 0,062W
3501	4822 051 30759	75R 5% 0,062W
3502	4822 051 30479	47R 5% 0,062W
3503	4822 051 30472	4k7 5% 0,062W
3505	4822 117 11817	1k2 1% 1/16W
3508	4822 051 30479	47R 5% 0,062W
3509	4822 051 30479	47R 5% 0,062W
3510	4822 051 30123	12k 5% 0,062W
3511	4822 051 30123	12k 5% 0,062W
3512	4822 051 30103	10k 5% 0,062W
3513	4822 051 30103	10k 5% 0,062W
3514	4822 051 30472	4k7 5% 0,062W
3521	4822 117 12139	22R 5% 0,062W
3522	4822 117 12139	22R 5% 0,062W
3523	4822 117 12139	22R 5% 0,062W
3524	4822 117 12139	22R 5% 0,062W
3525	4822 117 12139	22R 5% 0,062W
3526	4822 117 12139	22R 5% 0,062W
3527	4822 117 12139	22R 5% 0,062W
3528	4822 117 12139	22R 5% 0,062W
3530	4822 117 12139	22R 5% 0,062W
3531	4822 117 12139	22R 5% 0,062W
3532	4822 117 12139	22R 5% 0,062W
3533	4822 051 30472	4k7 5% 0,062W
3534	4822 051 30472	4k7 5% 0,062W
3535	4822 117 12139	22R 5% 0,062W
3536	4822 117 12139	22R 5% 0,062W
3537	4822 117 12139	22R 5% 0,062W
3538	4822 117 12139	22R 5% 0,062W
3539	4822 117 12139	22R 5% 0,062W
3540	4822 117 12139	22R 5% 0,062W
3541	4822 117 12139	22R 5% 0,062W
3542	4822 117 12139	22R 5% 0,062W
3543	4822 117 12139	22R 5% 0,062W
3544	4822 117 12139	22R 5% 0,062W
3545	4822 117 12139	22R 5% 0,062W
3546	4822 117 12139	22R 5% 0,062W
3547	4822 117 12139	22R 5% 0,062W
3548	4822 117 12139	22R 5% 0,062W
3549	4822 117 12139	22R 5% 0,062W
3550	4822 117 12139	22R 5% 0,062W
3551	4822 117 12139	22R 5% 0,062W
3561	4822 117 12139	22R 5% 0,062W
3562	4822 117 12139	22R 5% 0,062W
3563	4822 117 12139	22R 5% 0,062W
3564	4822 117 12139	22R 5% 0,062W
3565	4822 117 12139	22R 5% 0,062W
3566	4822 117 12139	22R 5% 0,062W
3567	4822 117 12139	22R 5% 0,062W
3568	4822 117 12139	22R 5% 0,062W
3569	4822 117 12139	22R 5% 0,062W
3570	4822 117 12139	22R 5% 0,062W
3571	4822 117 12139	22R 5% 0,062W
3572	4822 117 12139	22R 5% 0,062W
3574	4822 051 30472	4k7 5% 0,062W
3575	4822 117 12139	22R 5% 0,062W
3576	4822 117 12139	22R 5% 0,062W
3577	4822 117 12139	22R 5% 0,062W
3578	4822 117 12139	22R 5% 0,062W
3579	4822 117 12139	22R 5% 0,062W
3580	4822 117 12139	22R 5% 0,062W
3581	4822 117 12139	22R 5% 0,062W
3582	4822 117 12139	22R 5% 0,062W
3583	4822 117 12139	22R 5% 0,062W
3584	4822 117 12139	22R 5% 0,062W
3585	4822 117 12139	22R 5% 0,062W
3586	4822 117 12139	22R 5% 0,062W
3587	4822 117 12139	22R 5% 0,062W
3588	4822 117 12139	22R 5% 0,062W
3589	4822 117 12139	22R 5% 0,062W
3590	4822 117 12139	22R 5% 0,062W
3591	4822 117 12139	22R 5% 0,062W
3592	4822 117 12139	22R 5% 0,062W
3593	4822 051 30103	10k 5% 0,062W
3594	4822 051 30103	10k 5% 0,062W
4301	4822 051 30008	0R Jumper 0603
4302	4822 051 30008	0R Jumper 0603
4304	4822 051 30008	0R Jumper 0603
4305	4822 051 30008	0R Jumper 0603
4310	4822 051 30008	0R Jumper 0603
4400	4822 051 30008	0R Jumper 0603
4402	4822 051 30008	0R Jumper 0603
4523	4822 051 30008	0R Jumper 0603

COILS & FILTERS

5300	4822 157 11499	Ind EMI 100MHz 60R
5301	4822 157 11499	Ind EMI 100MHz 60R
5302	4822 157 70299	Coil 2,2uH
5303	4822 157 70299	Coil 2,2uH
5304	4822 157 70299	Coil 2,2uH
5305	4822 157 70299	Coil 2,2uH
5306	4822 157 71206	Ind EMI 100MHz 600R
5307	4822 157 71206	Ind EMI 100MHz 600R
5400	3198 018 63390	Coil 33uH 5%
5401	3198 018 63390	Coil 33uH 5%
5402	3198 018 63390	Coil 33uH 5%
5405	4822 157 71206	Ind EMI 100MHz 600R
5501	4822 157 11716	Ind EMI 100MHz 30R
5502	4822 157 11716	Ind EMI 100MHz 30R
5503	4822 157 11716	Ind EMI 100MHz 30R
5504	4822 157 11716	Ind EMI 100MHz 30R
5505	4822 157 11716	Ind EMI 100MHz 30R
5506	4822 157 11716	Ind EMI 100MHz 30R
5507	2422 549 43062	IND FXD SM EMI 100MHZ 600R

TRANSISTORS & INTEGRATED CIRCUITS

7300	9965 000 18637	M29F800DT-70N1 with SW program
7301	9322 163 27685	NCP301LSN45
7302	9322 185 43671	ES6028F
7303	9322 178 78668	K4S641632F-TC70
7304	9965 000 04931	M24C01-WMN6
7305	9322 178 32668	LF27CDT
7310	3198 010 42310	BC847BW
7362	3198 010 42310	BC847BW
7400	9322 177 92671	CS4362-KQ
7401	4822 209 30095	LM833D

7402	4822 209 30095	LM833D
7403	4822 209 30095	LM833D
7404	5322 130 60159	BC847B
7405	9352 456 90115	74HC1G125GW
7501	9322 185 10668	CS8415A-CZ
7502	9352 670 99118	UDA1361TS/N1
7503	9352 456 90115	74HC1G125GW
7504	3198 010 42310	BC847BW
7505	3198 010 42310	BC847BW

Note: Only the parts mentioned in this list are normal service spare parts.

13-1

EXPLODED VIEW - MAIN UNIT

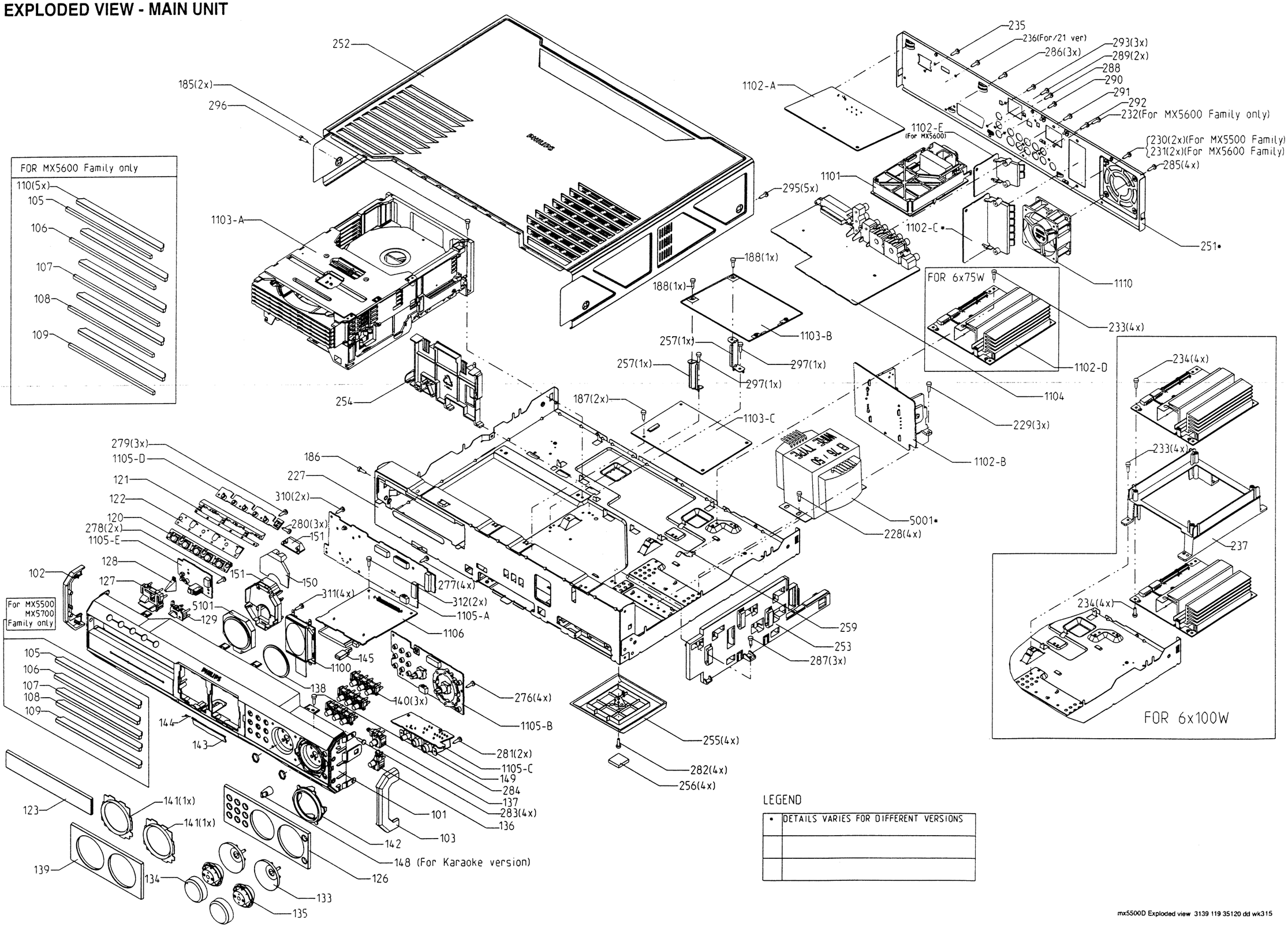

LEGEND

•	DETAILS VARIES FOR DIFFERENT VERSIONS

MECHANICAL & ACCESSORIES PARTS LIST - MAIN UNIT

101	3139 118 19351	Cabinet Front	MX5500D/21S
101	3139 118 19341	Cabinet Front	MX5500D/37
101	3139 257 50801	Cabinet Front	MX5600D/37
101	3139 257 51111	Cabinet Front	MX5700D/22S/25S
101	3139 257 51361	Cabinet Front	MX5700D/21R/21S
102	3139 118 18801	Cover Cabinet Side Left	
103	3139 118 18811	Cover Cabinet Side Right	
105	3139 118 19361	Cover Tray Disc1	MX5500D/MX5700D
105	3139 118 19961	Cover Tray Disc1	MX5600D
106	3139 118 19371	Cover Tray Disc2	MX5500D/MX5700D
106	3139 118 19771	Cover Tray Disc2	MX5600D
107	3139 118 19381	Cover Tray Disc3	MX5500D/MX5700D
107	3139 118 19981	Cover Tray Disc3	MX5600D
108	3139 118 19391	Cover Tray Disc4	MX5500D/MX5700D
108	3139 118 19991	Cover Tray Disc4	MX5600D
109	3139 118 19401	Cover Tray Disc5	MX5500D/MX5700D
109	3139 257 50001	Cover Tray Disc5	MX5600D.
110	3139 114 78491	Cover Tray 5DTC	MX5600D
120	3139 118 19441	Button Set CD Open/Close Chrome	
122	3139 113 27511	Cutsheet Shield CD Open/Close	
123	3139 118 19411	Panel Left	MX5500D/MX5700D
123	3139 257 50011	Panel Left	MX5600D
126	3139 118 19431	Panel Control	MX5500D/MX5700D
126	3139 257 50031	Panel Control	MX5600D
127	3139 118 18871	Button Set Power Eco	
128	3139 114 77041	Lightguide Power Eco Stdby	
133	3139 118 18941	Ring Ornamental	
134	3139 118 18931	Cap Knob Rotary Chrome	
135	3139 118 18921	Knob Source/Vol Rotary	
136	3139 118 19461	Button Set Bass Chrome	
137	3139 118 19471	Button Set Treble Chrome	
138	3139 257 51531	Window Display	
139	3139 118 19421	Panel Display	MX5500D/MX5700D
139	3139 257 50021	Panel Display	MX5600D
140	3139 118 19451	Button Set Ctrl Chrome	
141	3139 118 19481	Ring Orn Display	MX5500D/MX5700D
141	3139 257 50891	Ring Orn Display	MX5600D
142	3139 114 77551	Lightguide Volume	
143	3139 257 51541	Cover PCMCIA	
144	3139 111 10011	Spring Cover PCMCIA	
145	3139 257 50791	Knob Eject PCMCIA	
148	3139 257 50141	Knob Karaoke	/21R/21S
256	3139 113 27220	Foot Rubber	
259	3139 111 01470	Spring Grounding	
296	3139 110 40691	Screw Cap Hd Soc Hex Mac M5x6	

345	3139 119 00581	Satellite LS pack	MX5500D/21S
345	3139 119 00601	Satellite LS pack	not for MX5500D/21S
346	3139 119 00591	Subwoofer Box	MX5500D/21S
346	3139 119 00571	Subwoofer Box	MX5500D/37
346	3139 119 00611	Stand Subwoofer Box	MX5600D
346	3139 119 00651	Stand Subwoofer Box	MX5700D
351	4822 303 50063	FM Antenna	
352	4822 303 50082	AM Loop Antenna	
353	3139 228 61701	Remote Control RC19241001/01	
356	2422 070 98151 ⚠	Mains Cord 2A5 1,5M	/21R/21S/22S
356	9965 000 07586 ⚠	Mains Cord 2A5 1,5M	/25S
356	2422 070 98246 ⚠	Mains Cord UL 7A 1,5M	/37
357	3139 128 73010 ⚠	Adapter Plug 6A 250V	/21S
358	4822 263 21206	Cinch Cable 1,7M Yel	not for /22S/25S
361	2422 076 00374	Cinch Cable 1,5M 3P	not for /22S/25S
362	3103 308 92610	Audio Cable 1,5M	not for /22S/25S
363	2422 076 00528	Scart Cable 1,5M 21P	/22S/25S
370	3139 115 22261	Instr. For Use	MX5500D/21S
370	3139 115 22061	Instr. For Use	MX5500D/37
370	3139 115 22121	Instr. For Use	MX5600D/37
370	3139 115 22281	Instr. For Use	MX5700D/22S/25S
370	3139 115 22681	Instr. For Use	MX5700D/21R/22S
371	3139 115 22551	Instr. For Use Book 2	MX5700D/22S
1100	3139 119 00831	LCD Module MX5500D-01	
1106	3139 118 56571	PCMCIA Board	
1110	2822 031 01494	Fan 12Vdc 0,8W 3100rpm B	
5001	3139 118 32641 ⚠	Mains Transfo 6x75W	MX5500D/21S
5001	3139 118 32702 ⚠	Mains Transfo 6x100W	MX5600D/37
5001	3139 118 32631 ⚠	Mains Transfo 6x100W	MX5700D/22S/25S
5001	3139 118 32621 ⚠	Mains Transfo 6x100W	MX5700D/21R/21S
5101	3139 110 53431	VU Meter FG-PH16CATS00 Black	
8000	3139 110 35031	Flex Cable 8P 14cm AD	
8001	3139 111 02001	Flex Cable 13P 40cm BD	
8002	3139 111 02461	Flex Cable 14P 40cm AD	
8003	3139 111 02211	Flex Cable 16P 10cm AD	
8005	3139 111 02051	Flex Cable 7P 34cm AD	
8006	3139 110 34431	Flex Cable 8P 34cm AD	/21R/21S
8006	3139 110 34861	Flex Cable 4P 34cm AD	not for/21R/21S
8008	3139 111 02021	Flex Cable 4P 22cm AD	
8009	3139 111 02281	Flex Cable 40P 28cm AD	
8010	3139 111 01971	Flex Cable 18P 18cm AD	/21R/21S
8010	3139 111 02601	Flex Cable 16P 18cm AD	not for/21R/21S
8011	3139 111 02591	Flex Cable 10P 28cm AD	
8012	3139 111 02581	Flex Cable 13P 18cm AD	
8013	3139 111 02571	Flex Cable 10P 18cm BD	for 75W

MECHANICAL & ACCESSORIES PARTS LIST - MAIN UNIT

8014	3139 111 02571	Flex Cable 10P 18cm BD
8016	3139 110 36140	Flex Cable 4P 18cm AD
8018	3139 111 02231	Flex Cable 5P 12cm AD
8025	3139 111 02401	Flex Cable 10P 22cm BD

Note: Only the parts mentioned in this list are normal service spare parts.

MECHANICAL PARTS LIST - LOUDSPEAKERS BREAKDOWN

Breakdown of Satellite LS Package (For MX5500D/21S only)

9965 000 18060	Front Speaker Box Left
9965 000 18061	Front Speaker Box Right
9965 000 18065	Center Speaker Box
9965 000 18062	Surr. Speaker Box Left
9965 000 18063	Surr. Speaker Box Right
9965 000 18064	Front/Surround Spk Front Grille Assy
9965 000 18066	Center Speaker Grille Assembly
9965 000 17046	Philips Logo
9965 000 18067	Base Plate Front/Surround Speaker
9965 000 18068	Mounting Bracket + Screw Pack

Breakdown of Satellite LS Package (Not for MX5500D/21S)

9965 000 18070	Front Speaker Box Left
9965 000 18071	Front Speaker Box Right
9965 000 18074	Center Speaker Box
9965 000 18072	Surr. Speaker Box Left
9965 000 18073	Surr. Speaker Box Right
9965 000 18064	Front/Surround Spk Front Grille Assy
9965 000 18066	Center Speaker Grille Assembly
9965 000 17046	Philips Logo
9965 000 18067	Base Plate Front/Surround Speaker
9965 000 18068	Mounting Bracket + Screw Pack

Breakdown of Subwoofer Box (For MX5500D family)

9965 000 18059	Front Metal Grille Assembly
9965 000 17046	Philips Logo

Breakdown of Subwoofer Box (For MX56../MX57.. family)

Refer to Exploded view on page 13-3

9965 000 18406	2-Pins Terminal
9965 000 18407	Locking Top
9965 000 18413	2-Spring
9965 000 18405	4" Woofer Speaker 8R 100W
9965 000 18411	4-Pins Terminal (White & Purple)
9965 000 18412	4-Pins Terminal (Red & Purple)

Note: Only the parts mentioned in this list are normal service spare parts.

SCREW LISTS - MAIN UNIT

185	M3 x 6	234	D3 x 10	283	M3 x 6	295	M3 x 6
186	D3 x 10	235	D3 x 10	284	M3 x 6	296	M5 x 6 Hex W/Head
187	M3 x 6	236	D3 x 10	285	D3 x 10	297	M3 x 6
188	M3 x 6	276	D3 x 10	286	M3 x 6	310	D3 x 10
228	M3 x 6	277	D3 x 10	287	M3 x 6	311	D3 x 10
229	M3 x 6	278	D3 x 10	288	D3 x 10	312	M3 x 6
230	D3 x 10	279	D2 x 8	290	D3 x 10		
231	D3 x 10	280	D2 x 8	291	D3 x 10		
232	D3 x 10	281	D2 x 8	292	D3 x 10		
233	M3 x 6	282	M3 x 6	293	D3 x 10		

EXPLODED VIEW - STAND SUBWOOFER (For MX5600D & MX5700D only)

Screw size	Qty	Mounting
D3 x 10	2pcs	2-pins Terminal
D3.5 x 15	3pcs	Shotgun Top
D3 x 10	4pcs	Locking Assy (Top & Bottom)
D3.5 x 15	2pcs	Top Base
D3.5 x 15	3pcs	Supporter
D3 x 10	2pcs	4-pins Terminal
M5 x 14	4pcs	Base Cover
D3 x 15	6pcs	Base (Casting)

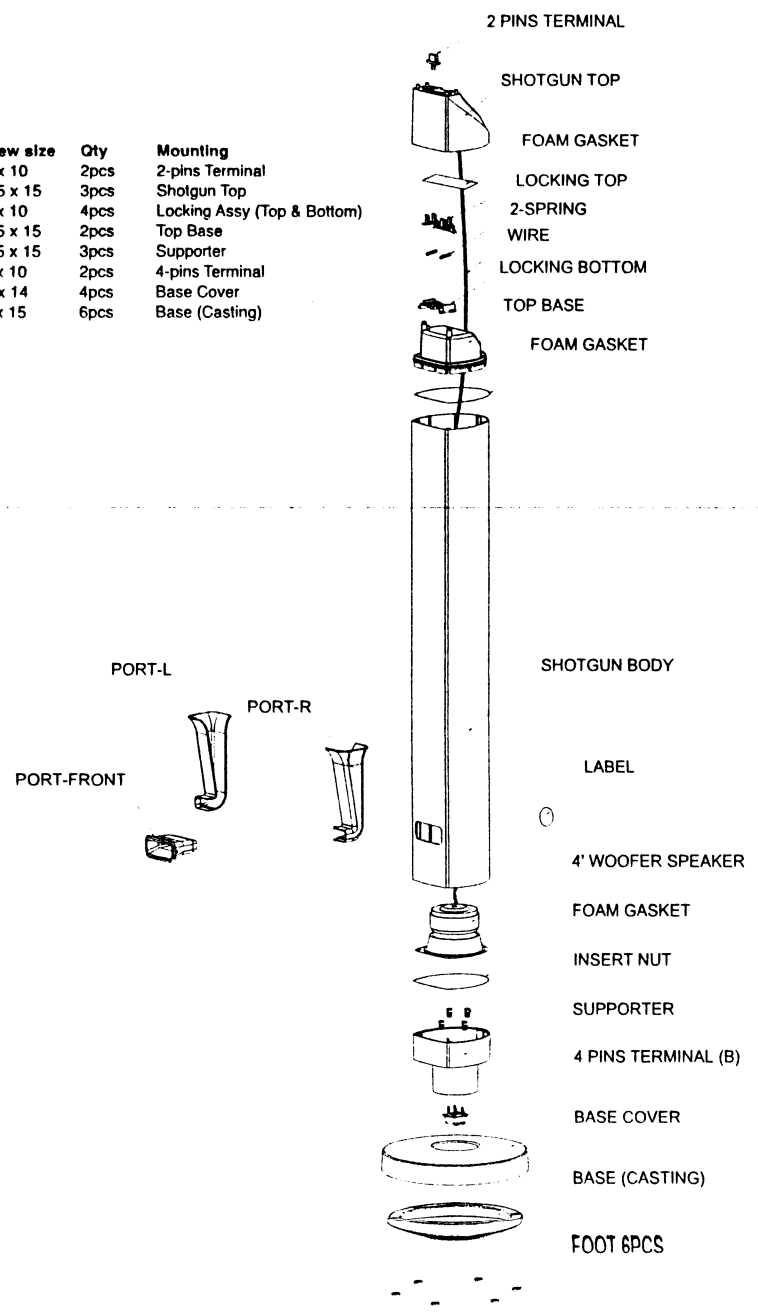

DOCUMENT HISTORY

Version 1.0

- Initial release

Version 1.1

- Add MX5700D/21R, MX5700D/21S and MX5700D/25S into existing service manual
  - Pages modified: Pg 1-1 to 1-3, 6-2, 6-16 to 6-17, 8-22, 9-16 to 9-18, 13-2